Virginia Department of Transportation

Guardrail Installation Training Manual
-GRIT-



Procedures and Practices for the Design, Installation, Replacement, and Repair of Guardrail and Crash Terminals

Published August 2017
(Revised Aug. 2019)

TABLE OF CONTENTS

CHAPTER 1: INTRODUCTION TO ROADSIDE SAFETY

A. The Need for Barrier Training 1-1
B. Clear Zone 1-1
C. Barrier Warrants 1-4
D. Barrier Flare Rates, Runout Length, and Shy line 1-6
E. Length of Need 1-7
F. Guardrail Testing Requirements 1-8
G. Deflection 1-8
H. Soil Backing 1-10
I. Barriers on Slopes 1-10
J. Curb Use with Guardrail 1-10
K. Measuring the Height of Guardrail Systems 1-11
L. Post Installation in Asphalt 1-12

CHAPTER 2: STANDARD GUARDRAIL SYSTEMS

A. Guardrail Requirements 2-1
B. VDOT NCHRP 350 Guardrail Systems 2-1
    1. VDOT GR-3 2-1
    2. VDOT GR-8, GR-8A, GR-8B, GR-8C 2-1
    3. VDOT GR-2, GR-2A 2-3
    4. VDOT MB-5, MB-3 2-4
C. VDOT MASH Guardrail Systems 2-4
    1. VDOT GR-MGS1, GR-MGS1A 2-4

CHAPTER 3: STANDARD GUARDRAIL TRANSITIONS

A. Weak Post Cable to Strong Post W-beam (GR-3 to GR-2) 3-1
B. Weak Post W-beam to Strong Post W-beam (GR-8 to GR-2) 3-1
C. Strong Post W-beam to Rigid Object (GR-2 to GR-FOA) 3-2
D. Guardrail Attachment to Temporary Concrete Barrier 3-4
E. Reducing W-beam Guardrail Deflection 3-4

MASH Transitions 3-4

A. NCHRP 350 W-beam to MASH W-beam (GR-MGS4) 3-4

CHAPTER 4: GUARDRAIL TERMINALS

A. NCHRP 350 Terminal Requirements 4-1
B. VDOT Approved NCHRP 350 Terminals 4-1
1. Cable Terminals (GR-3) 4-1
2. Weak Post W-beam Terminals (GR-8 Type II) 4-2
3. Strong Post W-beam (GR-6, GR-7, GR-9) 4-2
4. Median Barrier Terminal (GR-9) 4-5
5. Terminals for Curbed Sections 4-6
6. Trailing End Terminals (GR-11) 4-6
7. Bullnose Terminal 4-6
C. Site Grading 4-6
D. Breakaway Cable Anchorage Information 4-9
E. VDOT Approved MASH Terminals 4-10
1. Strong Post W-beam (GR-MGS2) 4-10
2. Trailing End Terminal (GR-MGS3) 4-10

CHAPTER 5: SPECIAL GUARDRAIL TREATMENTS

A. Guardrail at Low Fill Culverts (GR-10) 5-1
B. Extra Blockouts (GR-INS) 5-1
C. Radial Guardrail Terminals 5-1
D. High Tension Cable Systems 5-1

CHAPTER 6: BARRIER DELINEATION

A. Longitudinal Runs 6-1
B. Terminals 6-1

CHAPTER 7: GUARDRAIL INSTALLATION REFERENCES

APPENDIX 1: ACRONYMS & GLOSSARY

LIST OF FIGURES AND TABLES

FIGURE 1: COMPARATIVE RISK WARRANTS FOR EMBANKMENTS 1-5
FIGURE 2: DESIGN APPROACH BARRIER LAYOUT VARIABLES (LON) 1-7
FIGURE 4: RECOMMENDED BARRIER PLACEMENT FOR OPTIMUM

PERFORMANCE 1-9
FIGURE 6: GUARDRAIL HEIGHT RELATIVE TO SHOULDER/ CURB 1-11
FIGURE 7: STANDARD GR-3 TO STANDARD GR-2 TRANSITION 3-1
FIGURE 8: STANDARD GR-8 TO STANDARD GR-2 TRANSITION 3-1
FIGURE 9: STANDARD GR-FOA-1 3-2
FIGURE 10: STANDARD GR-FOA-2 3-3
FIGURE 11: STANDARD W-BEAM TERMINAL CONNECTOR (GR-HDW) 3-3
FIGURE 13: SUGGESTED ROADSIDE SLOPES FOR APPROACH BARRIERS 4-8
FIGURE 14: GR-MGS2 LIMITED USE SITE PREPARATION 4-11
FIGURE 15: NESTING OF W-BEAM RAIL FOR LEFT OUT POST (GR-10) 5-2

TABLE 1: FIRST HARMFUL EVENT FIXED-OBJECT FATALITIES BY OBJECT TYPE 1-2
TABLE 2: CLEAR ZONE DISTANCES 1-3
TABLE 3: DESIGN PARAMETERS FOR ROADSIDE BARRIER LAYOUT 1-6

CHAPTER 1



INTRODUCTION TO ROADSIDE DESIGN

CHAPTER 1
INTRODUCTION TO ROADSIDE DESIGN

A. NEED FOR BARRIER TRAINING

1. **Annually in the US**, there are over 40,000 fatalities on our nation's highways; more than half of them occurred as a result of a Roadway Departure- (RwD) crash. RwD Crashes are defined as a single vehicle leaving the roadway.

2. **Guardrail fatalities -** Over 1,500 of the RwD fatalities are caused by a roadside barrier as the first harmful event.

3. **In Virginia,** about 2/3 of all fatalities are the result of RwD crashes**.**

4. **The Virginia Strategic Highway Safety Plan** is committed to reducing fatalities and serious injuries due to crashes.
   http://www.virginiadot.org/info/resources/SHSP/VA_2017_SHSP_Final_Complete.pdf

5. **Complexity of barrier systems and safety devices** should be taken seriously.

6. **Roadside barriers are hazards!** Should only be used as a last resort.

7. **Barrier standards and specifications are constantly changing** and are based on vehicle designs and popularity, which affects the functionality of the barrier systems. Testing criteria changes are also made based on current vehicle designs.

B. CLEAR ZONE

Clear Zone definition: The total roadside border area, starting at the edge of the traveled way (thru-lane), available for safe use by errant vehicles.

1. **Each Location/Roadway has to be reviewed and the Clear Zone determined.**

2. Generalized **"DESIGN"** CZ distances **- Based on speed, traffic volume and cros-section/slope (see Table 2).**

3. Principle **- Provide the maximum, cost-effective clear zone**. Any non-removable or non-breakaway obstacle within the **"design"** clear zone should be considered for shielding with a barrier system. The designer should strive for consistency along any section of roadway. Clear Zone is provided for motorist safety and should not be confused with "Minimum Lateral Offset", as discussed in the VDOT Road Design Manual. Clear Zones should be provided for all roadways, including curbed sections.

Table 1: FIRST HARMFUL EVENT FIXED-OBJECT FATALITIES

(Virginia 2011-2015)

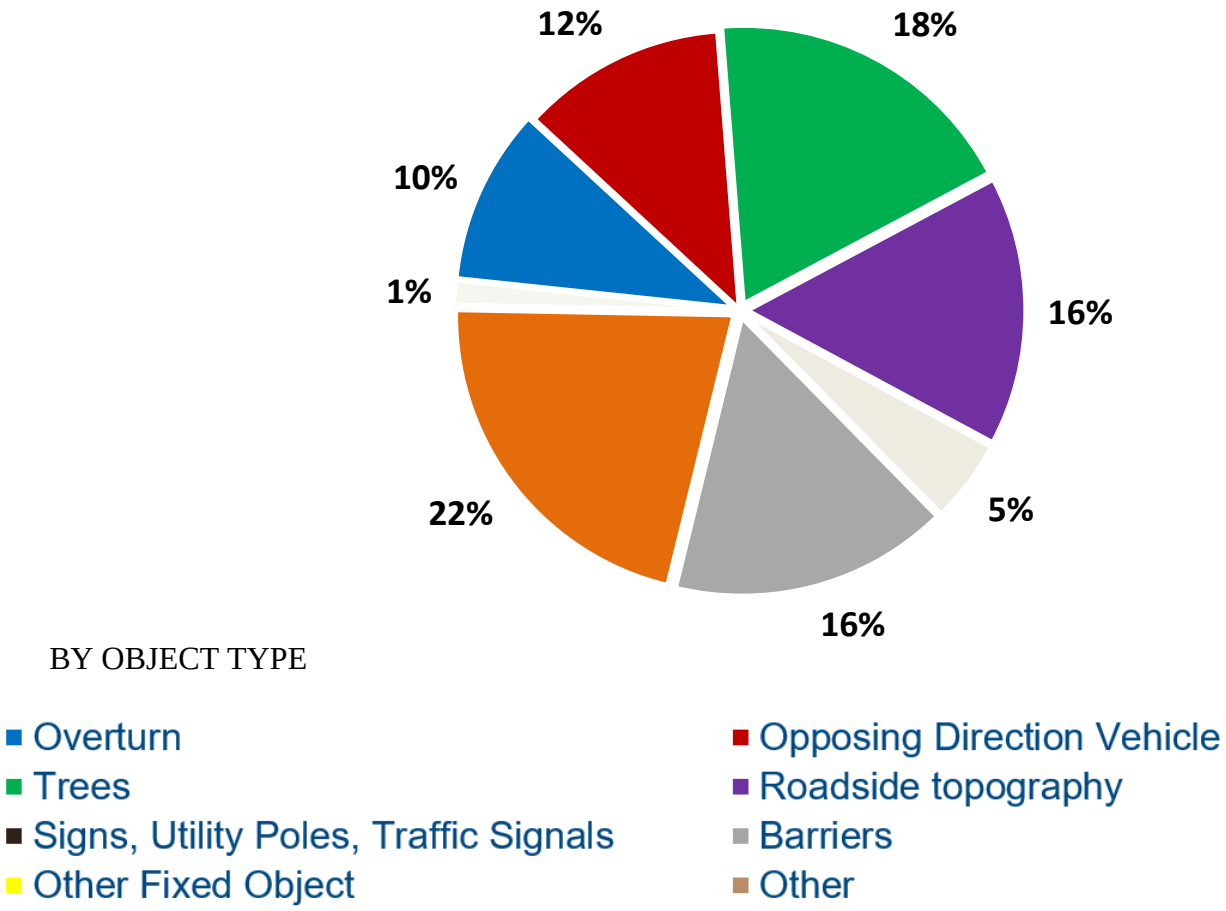

Fatal Highway Crashes in Virginia 2018

- **819 deaths (>2 per day)**
- **Approx. 550 were Roadway Departure Crashes (RwD)**
- **Primary and Secondary roads accounted for 65% of the RwD fatalities**
- **3,800 serious injuries as a result of RwD crashes**
- **Trees are the leading cause of RwD fatal crashes**

Table 2: SUGGESTED CLEAR ZONE DISTANCES (FROM EDGE OF THRU-LANE)

Design Speed	Design ADT	FORESLOPES (Fill)			BACKSLOPES (Cut)		
		6:1 or flatter	5:1 to 4:1	3:1	3:1	4:1 to 5:1	6:1 or flatter
40 MPH or less	Under 750	7-10	7-10	* *	7-10	7-10	7-10
	750-1500	10-12	12-14	* *	12-14	12-14	12-14
	1500-6000	12-14	14-16	* *	14-16	14-16	14-16
	Over 6000	14-16	16-18	* *	16-18	16-18	16-18
45-50 MPH							
	Under 750	10-12	12-14	* *	8-10	8-10	10-12
	750-1500	14-16	16-20	* *	10-12	12-14	14-16
	1500-6000	16-18	20-26	* *	12-14	14-16	16-18
	Over 6000	20-22	24-28	* *	14-16	18-20	20-22
55 MPH							
	Under 750	12-14	14-18	* *	8-10	10-12	10-12
	750-1500	16-18	20-24	* *	10-12	14-16	16-18
	1500-6000	20-22	24-30	* *	14-16	16-18	20-22
	Over 6000	22-24	26-32*	* *	16-18	20-22	22-24
60 MPH							
	Under 750	16-18	20-24	* *	10-12	12-14	14-16
	750-1500	20-24	26-32*	* *	12-14	16-18	20-22
	1500-6000	26-30	32-40*	* *	14-18	18-22	24-26
	Over 6000	30-32*	36-44*	* *	20-22	24-26	26-28
65-70 MPH							
	Under 750	18-20	20-26	* *	10-12	14-16	14-16
	750-1500	24-26	28-36*	* *	12-16	18-20	20-22
	1500-6000	28-32*	34-42*	* *	16-20	22-24	26-28
	Over 6000	30-34*	38-46*	* *	22-24	26-30	28-30

*When a site specific investigation indicates a high probability of continuing crashes, or when such occurrences are indicated by crash history, the designer may provide clear zone distances greater than the clear zone shown in table 2. Clear zones may be limited to 30 feet for practicality and to provide a consistent roadway template if previous experience with similar projects or designs indicates satisfactory performance.

**Because recovery is less likely on the unshielded, traversable 3:1 slopes, fixed objects should not be present in the vicinity of the toe of these slopes. Recovery of high speed vehicles that encroach beyond the edge of shoulder may be expected to occur beyond the toe of slope. Determination of the width of the recovery area at the toe of slope should take into consideration right of way availability, environmental concerns, economic factors, safety needs, and crash histories. Also, the distance between the edge of the travel lane and the beginning of the 3:1 slope should influence the recovery area provided at the toe of slope. A 10' recovery area at the toe of slope should be provided.

For roadways with low volumes it may not be practical to apply even the minimum cz values.

C. BARRIER WARRANTS

Since roadside barriers are hazards, they should be used only as a last resort. Consideration should first be given to alternative measures to try to avoid the need for a roadside barrier.

1. The first priority should be to eliminate the hazardous situation. Many fixed objects such as trees, boulders and fixed objects can be removed, thereby eliminating the need for a roadside barrier.

2. Re-grade steep slopes and ditches, and modify drainage structures, to make them traversable.

3. Relocate signs and signals supports, utility poles and endwalls by placing them, at a minimum, outside of the clear zone and preferably in an area where they cannot be easily struck.

4. New structures should be designed so that headwalls, sign, signal and lighting supports, piers and abutments are outside of the clear zone.

5. Make necessary features within the clear zone of a yielding or breakaway design.

Typical features that warrant consideration of barrier installation when inside the clear zone include:

1. Bridge abutments, piers and parapet end. Utility poles on a case-by-case basis.

2. Severe longitudinal and transverse ditches, such as ditches with front slopes steeper than 4:1 and back slopes of 2:1 or steeper, generally warrant guardrail.

3. Non-breakaway sign/signal supports, luminaire supports and high mast lighting poles.

4. Permanent bodies of water greater than 2' deep.

5. Fill slopes steeper than 3:1 with a height of 7' 6" or more (see Figure 1). (See Road Design Manual, Section A-3-Traffic Barrier Installation Criteria).

6. Trees with a diameter of 4" or more at maturity if they cannot be removed

7. Rough rock cuts and boulders are usually an engineering judgment decision.

8. Retaining walls, culverts, endwalls and pipe ends are an engineering judgment decision based on slopes and distance from the road.

Figure 1: COMPARATIVE RISK WARRANTS FOR EMBANKMENTS

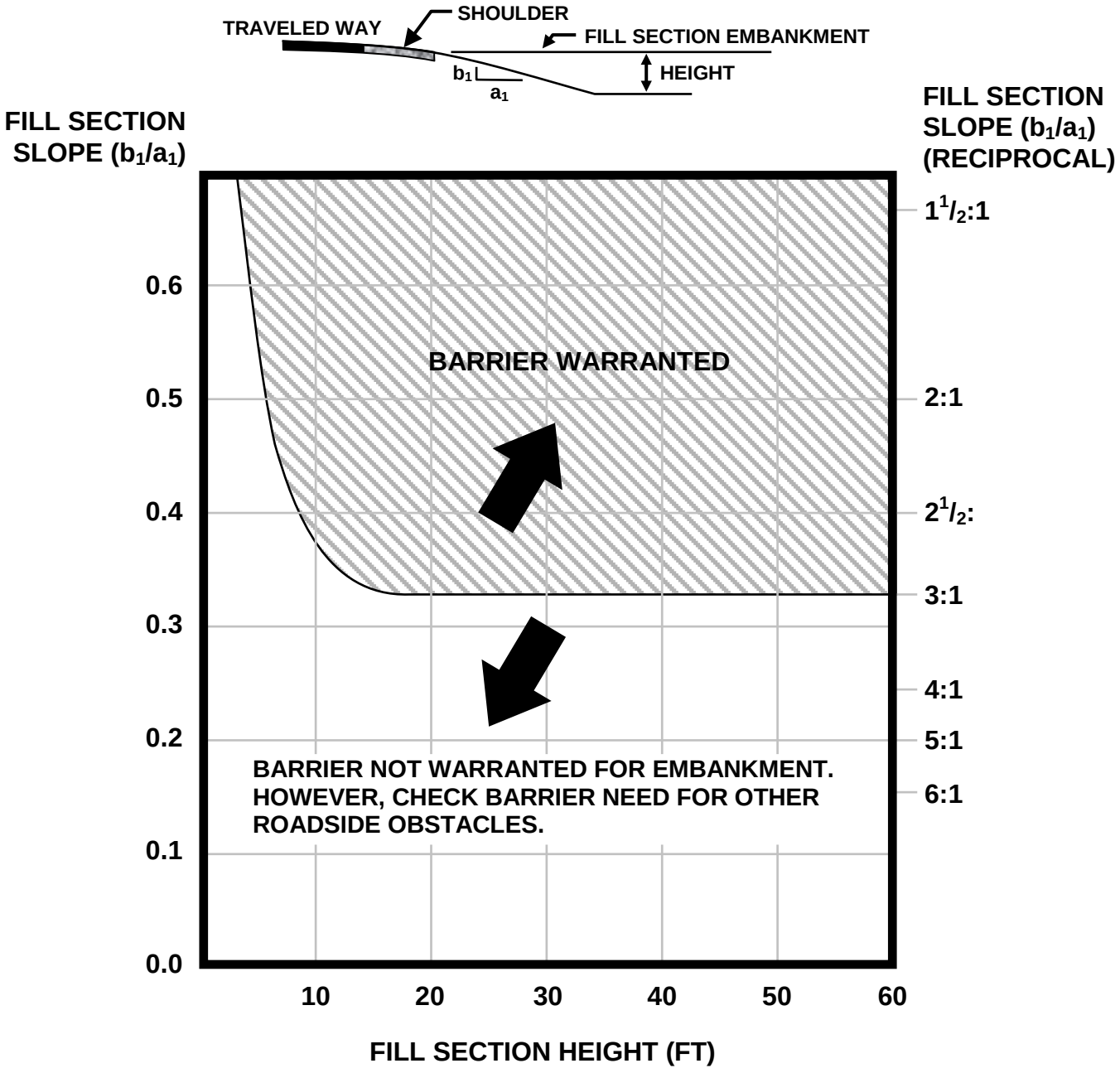

D. FLARE RATE

Flare rate is the rate at which a barrier moves from a larger offset to a closer offset from the edge of traveled way as a vehicle moves downstream. For one-directional roadways, the downstream flare rate, as the barrier moves away from the traveled way, is not restricted. Although it is desirable to flare the barrier system as far from the traveled way and as quickly as possible, there are two criteria that must be satisfied. First, in order to keep the angle of impact with the barrier from being too severe, the flare rate is limited to the values shown in Table 3 which are based on speed, the type of barrier used, and the shy line. Second, the barrier should only be flared if it is on a 10:1 or flatter slope.

Table 3: DESIGN PARAMETERS FOR ROADSIDE BARRIER LAYOUT

RUNOUT LENGTH, SHY LINE, and FLARE RATE

DESIGN SPEED (MPH)	DESIGN TRAFFIC VOLUME (ADT)				* SHY LINE (FT)	FLARE RATE		
	OVER 10,000	5000 – 10,000	1,000 – 5,000	UNDER 1,000		BEYOND SHY LINE		INSIDE SHY LINE
	RUNOUT LENGTH Lr(FT)	RUNOUT LENGTH Lr(FT)	RUNOUT LENGTH Lr(FT)	RUNOUT LENGTH Lr(FT)		MGS1, GR-2, 3 & 8 MB-3	MB-7D,7E,7F,12A,12B,12C	ALL
80	470	430	380	330	12			
70	360	330	290	250	9	15:1	20:1	30:1
60	300	250	210	200	8	14:1	18:1	26:1
50	230	190	160	150	6.5	11:1	14:1	21:1
40	160	130	110	100	5	8:1	10:1	16:1
30	110	90	80	70	4	7:1	8:1	13:1

Shy Line: The distance from the edge of the thru travel lane, beyond which a roadside object will not be perceived as hazardous and result in a motorist reducing speed or changing vehicle position on the roadway.

E. LENGTH OF NEED DETERMINATION

1. Length of Need (LON) is defined as the length of barrier needed to shield the hazard.

2. Calculation of the LON shall be determined from a geometric formula using values based on **speed, the distance from the traveled way to the back of the hazard, and the offset of the barrier from the traveled way.**

3. The Calculated LON should be adjusted upward to account for the industries manufactured lengths of barrier section. For W-Beam guardrail, it is suggested that 25' increments be used wherever practical.

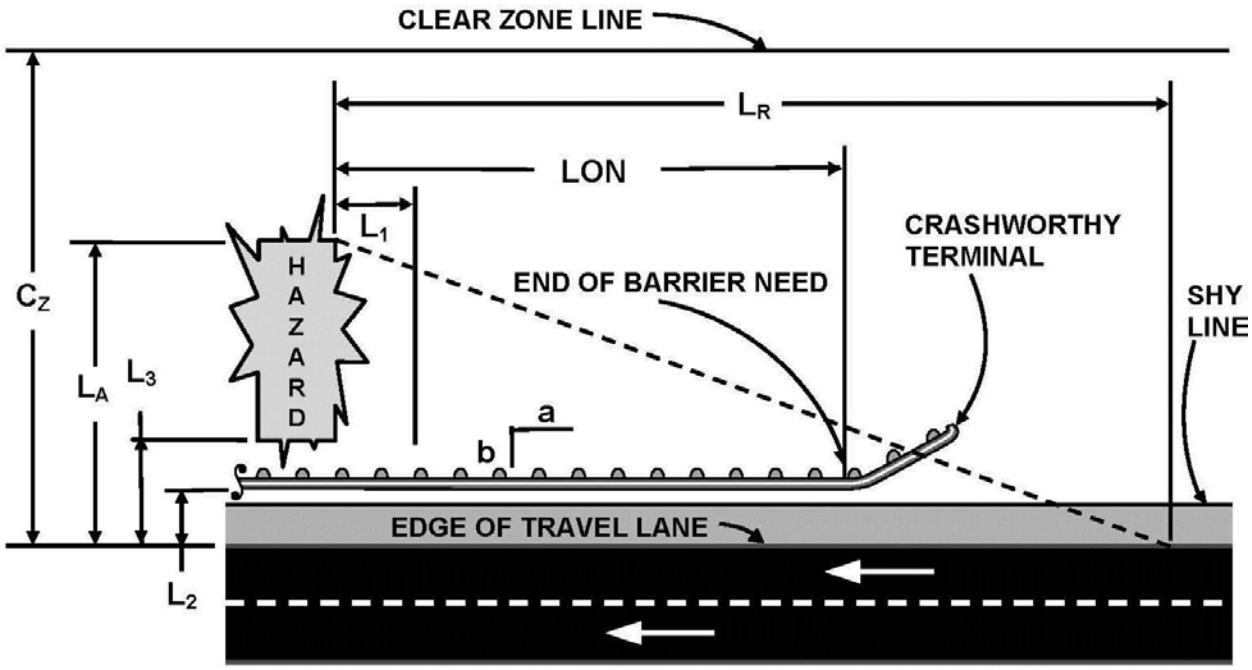

LON = Length of Need

C_Z = Clear Zone Width

L_A = Distance to back of hazard, Max. = C_Z

L_R = Runout Length (see pg. 1-6)

L_1 = Upstream length of Guardrail prior to flare

L_2 = Offset of Guardrail from travelway

L_3 = Distance to front of hazard

a:b = Flare Rate of Guardrail (if applicable)

$$\text{LON (No Flare)} = \frac{L_A - L_2}{L_A / L_R}$$

$$\text{LON} = \frac{L_A + (b/a)(L_1) - L_2}{(b/a) + (L_A/L_R)}$$

F. ROADSIDE BARRIER TESTING REQUIREMENTS

All new roadside barrier installations must meet the Manual for Assessing Safety Hardware (MASH) testing criteria. The most common criteria specified by the Commonwealth is the Crash Test Level 3 (TL-3) which uses a 5000 lb pickup truck and a 2425 lbs. small car impacting the device at 62 mph. For standard guardrail sections there are two general types of crash tests: one is a series of strength tests, using the pickup truck at the designated speed impacting at 25°, the other series is the severity tests, using the small vehicle at the designated speed striking at 25°. Lower speed Test Levels 1 and 2 are conducted using the pickup truck and compact car at impact speeds of 31 and 43 mph respectively. For Test Levels 4 through 6 additional tests are conducted with larger commercial trucks impacting at 56 mph at 15°.

On VDOT projects, Test Level 3 is the minimum test criteria for all standard barrier applications with the following exceptions. Test Level 1 and 2 devices may be applicable on low speed local streets and in some work zones. Test Level 4 devices may be applicable on bridges and High Tension Cable Barrier. Test Level 4, 5 and 6 devices may be used on roadways with a large volume of truck traffic, a specific type of truck traffic such as tankers, and/or severe/substandard geometrics.

G. DEFLECTION

No rigid, vertical object shall be placed within the deflection distance of the barrier system (see Figure 4a). Although multi-directional (not bi-directional slip bases) breakaway devices within the deflection distance do not have an adverse effect on the performance of the system, they should be offset wherever possible beyond the deflection distance. This is primarily a maintenance consideration, since it should reduce damage to the supports. If the dynamic deflection distance cannot be achieved to a rigid object hazard,, the system must be stiffened in front of and upstream of the obstacle. This will be achieved by decreasing post spacing, The stiffening method should begin 25' (minimum) in advance of the hazard and continue at least to the end of the hazard. Where the hazard is a solid obstacle and would not permit pocketing within the length of the obstacle, the stiffening may be eliminated beyond 25' downstream from the beginning of the obstacle.

Note: For Maintenance and Repair of VDOT Standard GR-2, double nested rail is acceptable. For GR-MGS1A, ONLY the reduced post spacing is allowed.

Figure 4: RECOMMENDED BARRIER PLACEMENT FOR OPTIMUM PERFORMANCE

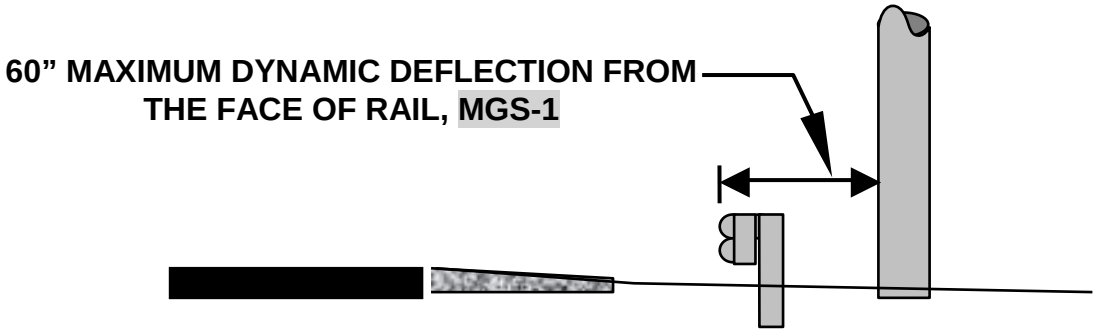

a) DEFLECTION DISTANCE

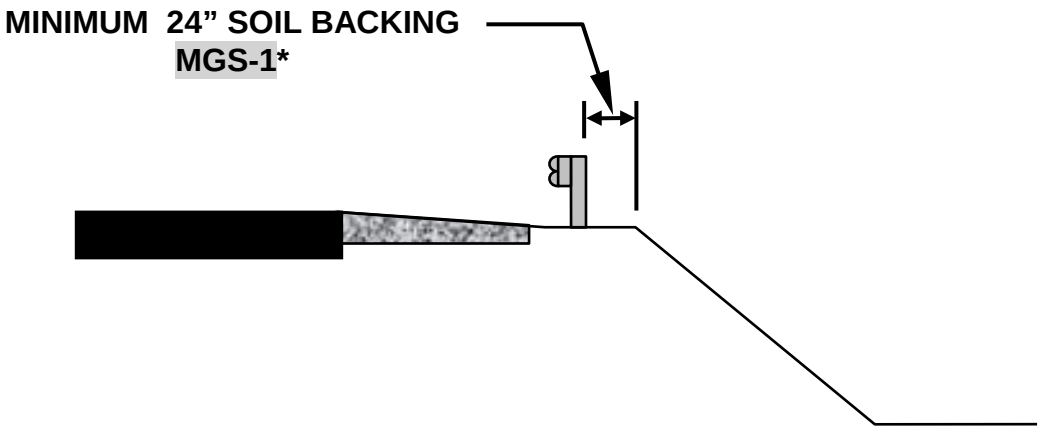

b) PLACEMENT ON EMBANKMENTS

***NOTE:**

IF SOIL BACKING IS LESS THAN 24”, 9’ POSTS SHALL BE USED. MGS-1

H. SOIL BACKING FOR GUARDRAIL POSTS

Since there is a considerable contribution to the redirectional capability of the system from the strength of the guardrail posts, it is necessary to develop adequate soil support and resistance for the post to prevent it from pushing backwards too easily. A minimum of 24" of soil support should be provided behind each post (see Figure 4b). If a min. 24" of soil support cannot be provided, extra-long 9' posts shall be used in lieu of standard 6' posts.

I. BARRIERS ON SLOPES

1. No barrier system is to be placed on slopes steeper than 10:1.

2. W-beam systems may be placed anywhere on slopes 10:1 or flatter.

J. CURB USE WITH GUARDRAIL

If curbs must be used, they shall only be used in conjunction with strong post systems GR-MGS1 or GR-MGS1A subject to the following conditions:

1. For design or posted speeds of 45 mph and less, any VDOT standard curb, or curb and gutter may be used. The guardrail should be constructed so that the face of rail is flush with the face of curb. If it is not practical to install the guardrail flush with the face of the curb, the guardrail shall be constructed with a minimum 6' offset from face of curb to face of rail.

2. For design or posted speeds greater than 45 mph, Guardrail shall be constructed so that the face of rail is flush with the face of curb. Any deviation from this policy will require a design waiver.

Note: VDOT Standard CG-2, CG-6 (6" Curb) and VDOT Standard CG-3, and CG-7 curb (4" Curb) can be used in conjunction with GR-MGS1 and GR-MGS1A

K. MEASURING HEIGHT OF GUARDRAIL

The height of the w-beam rail element is critical for the proper performance of the guardrail system. There is one important point to consider in determining the technique or method used to measure the height of the rail elements. The location of the guardrail system relative to the ground or curbing beneath the w-beam will determine how the height of the guardrail is measured. The following bullet points coupled with the Figure 6 will provide the necessary guidance for measuring the height of guardrail systems during and after installation.

- **W-beam systems** - If the face of the w-beam rail element is above the shoulder (10:1 or flatter slope), the height is measured from the shoulder to the top of the w-beam.
- **W-beam systems**- If the face of the w-beam rail element is above a curb, the height shall be measured from the pavement slope extended as depicted in Figure 6.

Figure 6

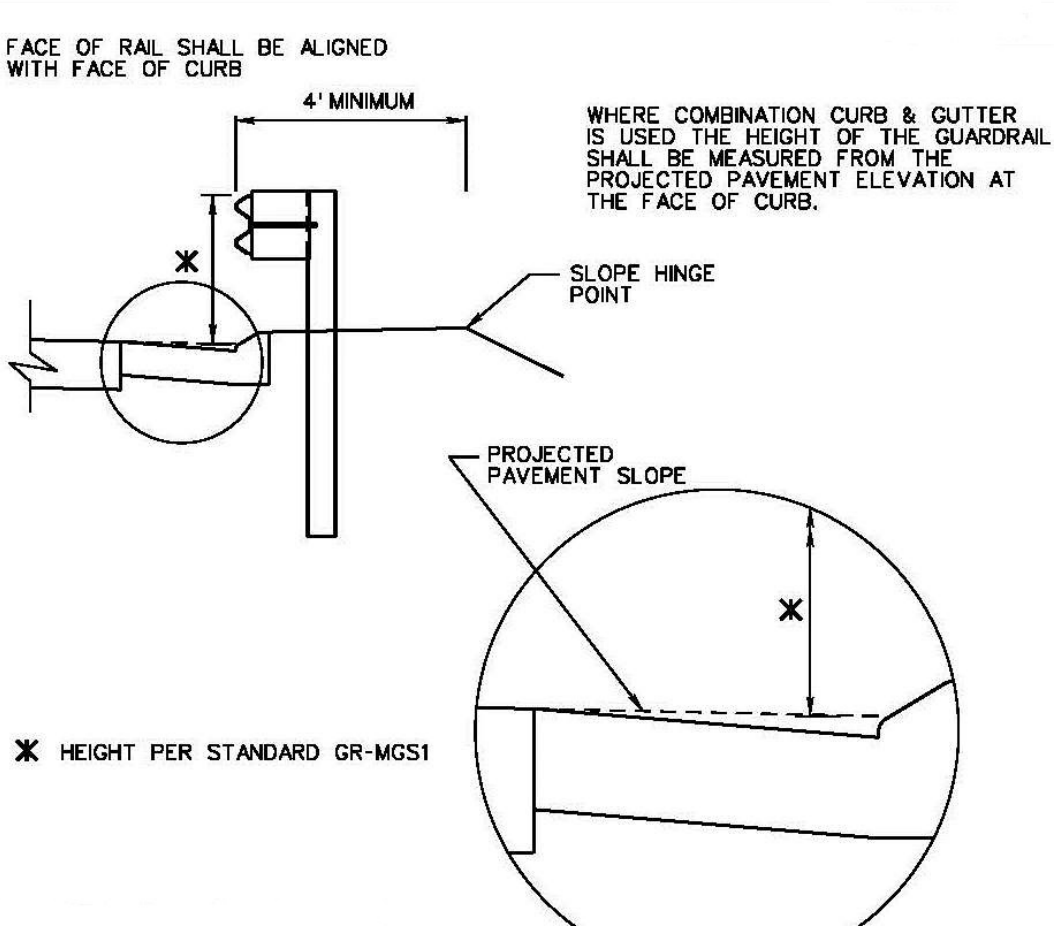

L. POST INSTALLATION IN ASPHALT

Installing the GR-MGS1 system in asphalt is limited to a maximum 2" of asphalt.
In areas where the asphalt is greater than 2", a post leave out area must be provided at each post location. This can be achieved by either cutting a 15" square hole, or auguring a 15" diameter hole. The post shall be "fronted" in the hole with no less than 7" from the back of post to the back of the asphalt leave out.

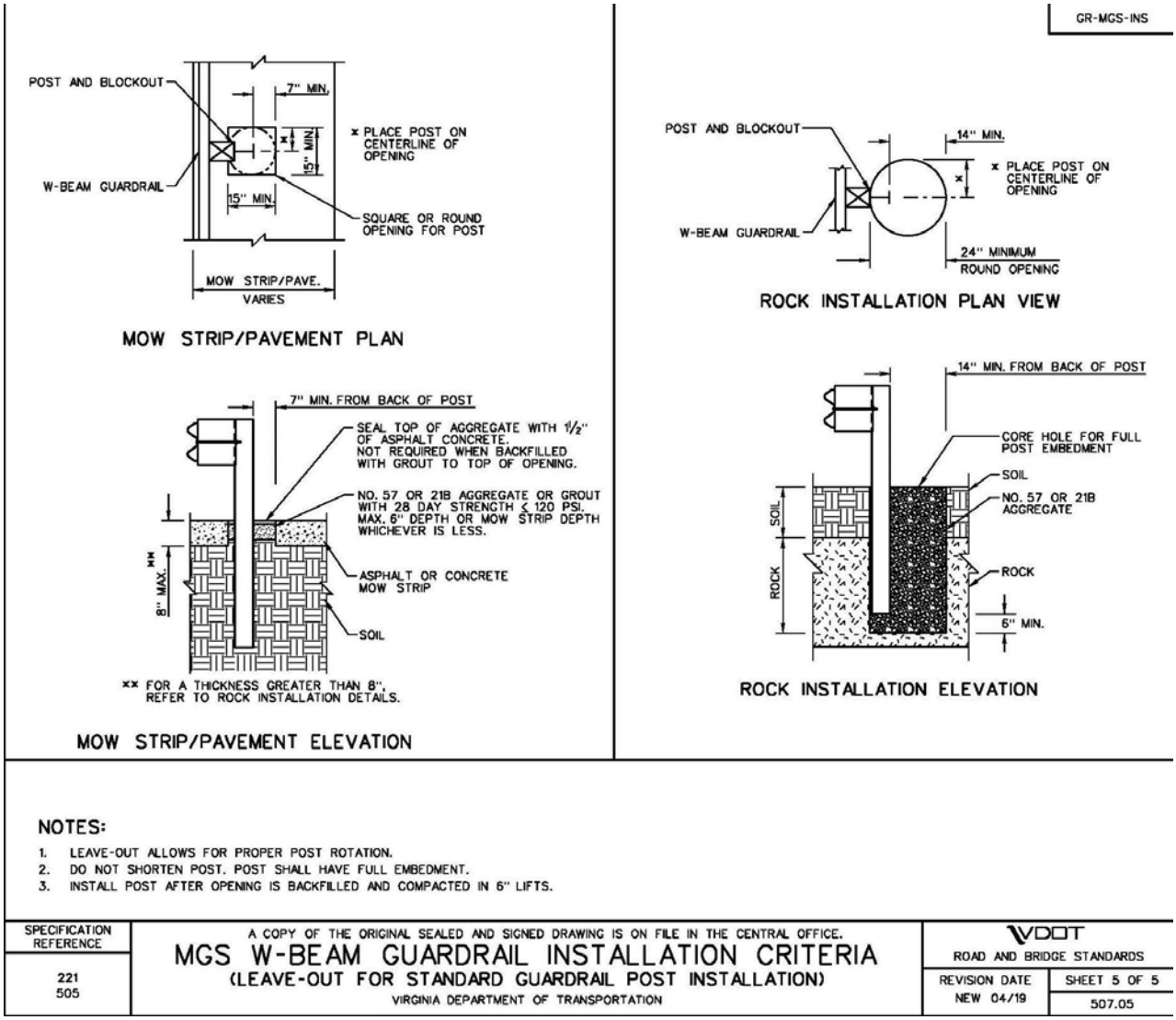

CHAPTER 2



STANDARD NCHRP 350 and MASH GUARDRAIL SYSTEMS

CHAPTER 2

VDOT STANDARD GUARDRAIL SYSTEMS

A. GUARDRAIL REQUIREMENTS

- **NCHRP 350 Guardrail Standards shall only be used for Maintenance and Repair work.**
- **For new construction and complete replacement, MASH approved systems shall be used.**

B. VDOT NCHRP 350 GUARDRAIL SYSTEMS

1. VDOT Standard GR-3 - Weak Post Cable System

a. Height of cable - The top cable must be a **minimum of 27"** to a **maximum of 28"** above the finished grade. **The cables are spaced 3" apart.**

b. Posts - S3 x 5.7 by 5' 3" long steel posts with an 8" x 24" soil plate.

c. Post spacing - **The standard post spacing is 16'**.

d. Deflection **- Maximum dynamic deflection is 11'**.

e. Tensioning of cable - The terminals on a cable rail system shall be fitted with turnbuckles and spring compensators to maintain and adjust desired cable tensioning for the expected ambient temperature range. After the initial tensioning, and after a period of time, the cable shall be re-tensioned due to stretching of the cable. Specifications on tensioning requirements are published in Section 505 of the Road and Bridge Specifications.

2. VDOT Standard GR-8, 8A, 8B, 8C - Weak Post W-beam System

a. Height of rail - **The height to the top of the W-beam rail element shall be 32 ¼" with a tolerance of ± ¾" (31 ½" minimum - 33" maximum)**. If the finished grade slope beneath the face of w-beam rail is 10:1 or flatter the height is measured from the finish grade directly below the w-beam rail. If the slope of the finished grade is steeper than 10:1, but no steeper than 6:1, and the w-beam rail is within 2' of the shoulder/frontslope hinge point, the height is measured from the shoulder slope extended (See Figure 6). If the w-beam rail is placed on a 6:1 slope at a distance of 12' or more from the shoulder/frontslope hinge point, the height of the w-beam rail is measured from finish grade directly below the w-

beam rail. Please refer to Figure 6, "Guardrail Height Relative to Edge of Shoulder" for a graphic description.

STANDARD NCHRP 350 GUARDRAIL SYSTEMS

b. Posts - S3 x 5.7 by 5' 3" long steel posts with an 8" x 24" soil plate.

c. Post spacing - The Standard **GR-8 post spacing is 12' 6"**.
- The Standard **GR-8A post spacing is 6' 3"**.
- The Standard **GR-8B post spacing is 3' 1½"**.
- The Standard **GR-8C post spacing is 4' 2"**.

d. Deflection - **Maximum dynamic deflection for GR-8 is 7'.**
Maximum dynamic deflection for GR-8A is 5'.
Maximum dynamic deflection for GR-8B is 4'.
- **Maximum dynamic deflection for GR-8C is 4'-6".**

e. Washers – 2 washers 1 ¾" square by 0.135" thick shall be used on the traffic side of each post. A single round washer and double nut connection on the opposite side of these bolts.

f. Bolts - 5/16" hex bolts and nuts are to be used for rail connection to the posts.

g. Backup Plate – a 12" long w-beam backup plate (12 gauge) shall be used at each post at a non-splice location.

h. Rail Splice – located mid-span between posts.

i. Lapping:

(1) For one-way traffic, all W-beam panels shall be lapped in direction of traffic. The upstream/run-on panel should always overlap the downstream/run-off panel including terminal connectors at fixed object attachments and at end sections on trailing end terminals.

(2) With two-way traffic, the laps on the right side of traffic are to be lapped in direction of the adjacent traffic. The upstream/run-on panel should always overlap the downstream/run-off panel including terminal connectors at fixed object attachments and at end sections on trailing end terminals (GR-11).

STANDARD NCHRP 350 GUARDRAIL SYSTEMS

3. Standard GR-2, 2A - Strong Post, Blocked-out W-beam System

a. Height of rail - **The top of the W-beam must be a minimum of 27 ¾"to a maximum of 28 ¾"**. If the finished grade slope beneath the face of w-beam rail is 10:1 or flatter the height is measured from the finish grade directly below the w-beam rail. If the slope of the finished grade is steeper than 10:1, but no steeper than 6:1, and the w-beam rail is within 2' of the shoulder/frontslope hinge point, the height is measured from the shoulder slope extended (See Figure 4). If the w-beam rail is placed on a 6:1 slope at a distance of 12' or more from the shoulder/frontslope hinge point, the height of the w-beam rail is measured from finish grade directly below the w-beam rail. Please refer to Figure 6, "Guardrail Height Relative to Edge of Shoulder" for a graphic description.

b. Posts and blockouts:

(1) Wood posts - 6" x 8" x 6' long with 6" x 8" x 14**" wood blockouts toe-nailed to posts on both sides** to prevent rotation. Drive the nail 2" from the top or bottom of the blockout after the bolt is installed.

(2) Steel posts - W6 x 8.5 or 9 x.6' long with 6" x 8" x 14" long routed wood or composite blockouts to prevent rotation. Steel blockouts are not acceptable for new or relocated installations. Routed 6" x 6" x 14" long wood blockouts may be used in repair work in special situations.

c. Post spacing - The Standard **GR-2 post spacing is 6' 3"**.
·The Standard **GR-2A post spacing is 3' 1½"(or 6' 3" with the use of a 2nd W beam rail element)**.

d. Deflection - **Maximum dynamic deflection for GR-2 is 3'.**
Maximum dynamic deflection for GR-2A is 2'.

e. Lapping**:**

(1) For one-way traffic, all W-beam panels shall be lapped in direction of traffic. The upstream/run-on panel should always overlap the downstream/run-off panel.

(2) With two-way traffic, the laps on the right side of traffic are to be lapped in direction of the adjacent traffic. The upstream/run-on panel should always overlap the downstream/run-off panel.

STANDARD NCHRP 350 GUARDRAIL SYSTEMS

4. VDOT Standard MB-5 (Weak Post) and VDOT Standard MB-3 (Strong Post) W-Beam Median Barriers

a. Standards - The height of rail, post lengths, blockouts, washer requirements, post spacing and lapping are the same as that for single rail W-beam barrier (GR-2 and GR-8).

b. Deflection - Maximum dynamic deflection is generally not a concern with median barrier, except that the offset, desirably from the edge of shoulder and absolutely from the edge of traveled way to the face of the barrier, must be greater than the expected deflection.

C. STANDARD MASH GUARDRAIL SYSTEMS

1. VDOT Standard GR-MGS1 and 1A - Strong Post, Blocked-out W-Beam System

a. Height of Rail - The top of the W-beam must be a minimum of 30” to a maximum of 32” above the ground line.

b. Posts and Blockouts - Steel posts, W6 x8.5 or W6 x 9 , 6’ in length with 6” x 12” x 14” long routed wood or approved composite blockouts, to prevent rotation. 9’ long posts acceptable in some situations.

c. Post Spacing - Standard post spacing for GR-MGS1 is 6’ 3”. Standard post spacing for GR-MGS1A is 3’ 1 ½”

d. Splice Joints - Splices shall occur “mid span”, between the posts for GR-MGS1

e. Deflection – Maximum dynamic deflection for GR-MGS1 is 5’. Maximum dynamic deflection for GR-MGS1A is 4’.

NOTE: **Deflection is measured from the face of the rail.**

f. Splice Joint Lapping - For one-way traffic, all W-beam panels shall be lapped in the direction of traffic. For two-way traffic, the laps shall be in the direction of the adjacent traffic. The upstream/ run-on panel shall always overlap the downstream/run-off panel

CHAPTER 3



NCHRP 350 and MASH GUARDRAIL TRANSITIONS

CHAPTER 3
NCHRP 350 GUARDRAIL TRANSITIONS

NCHRP 350 Guardrail Standards shall only be used for Maintenance and Repair work.

When a length/run of guardrail contains two or more guardrail systems, or a guardrail system is connected to a rigid object, a transition must be provided to gradually reduce the deflection distances between the different guardrail systems or the rigid object. Otherwise, a vehicle may pocket or snag as the deflection distances change. This applies to all approach traffic, whether adjacent to or from the opposing direction on divided or undivided roadways.

A. WEAK POST CABLE TO STRONG POST W-BEAM (GR-3 to GR-2)

The Standard GR-2 strong post system is to be placed such that it begins a minimum of 24' upstream of the cable anchorage deadman with a minimum offset distance of 11' behind the GR-3 weak post cable system. Refer to the GR-3 standard for the additional transition offset distances.

Figure 7: STANDARD GR-3 TO STANDARD GR-2 TRANSITION

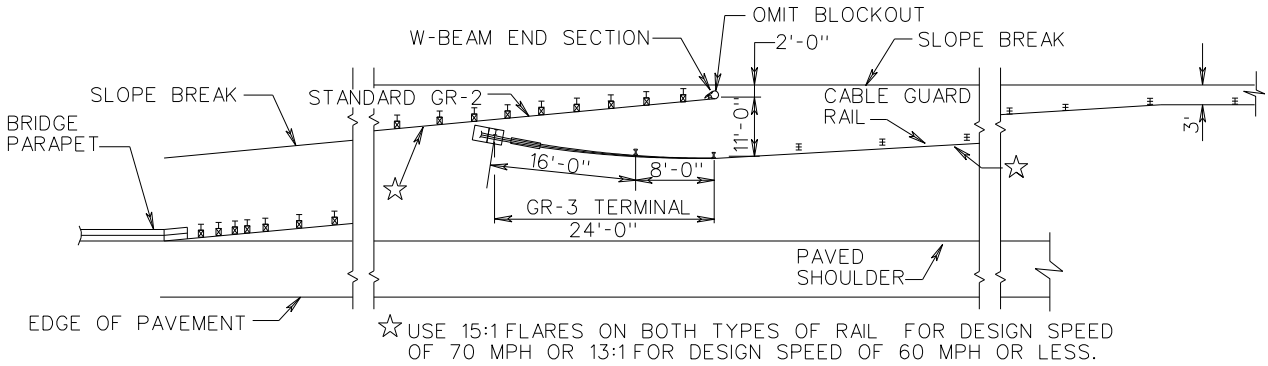

B. WEAK POST W-BEAM TO STRONG POST W-BEAM (Standard GR-INS)

Figure 8: STANDARD GR-8 TO STANDARD GR-2 TRANSITION

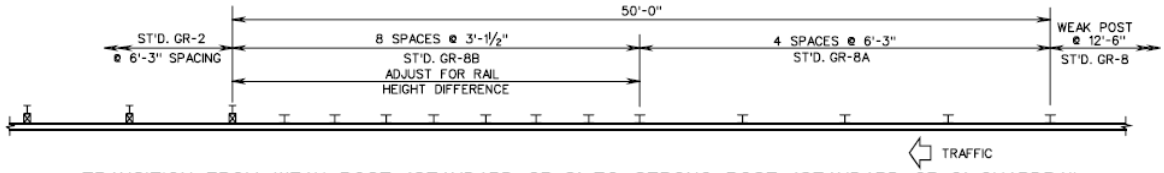

TRANSITION FROM WEAK POST (STANDARD GR-8) TO STRONG POST (STANDARD GR-2) GUARDRAIL

Standard GR-8 weak post system post spacing must be reduced from 12' 6" to 6' 3" (GR-8A) for four spaces or 25', and then to 3' 1 ½" (GR-8B) for eight post spaces or an additional 25'. The height differential should be adjusted in the eight post spacing of the Standard GR-8B prior to the Standard GR-2.

NCHRP 350 GUARDRAIL TRANSITIONS

C. W-BEAM SYSTEMS TO RIGID OBJECTS (Standard GR-FOA-1, GR-FOA-2, GR-FOA-4)

FOA-1 and FOA-2 will continued to be used where applicable. When using FOA-1 and FOA-2, the Standard MGS-4 shall be used to transition between the NCHRP 350 system and the new MASH system.

There are many transition systems available for strong post guardrail to rigid objects. Some are dependent on the shape of the rigid object. The two predominant shapes are a vertical wall (GR-FOA-1) and a concrete safety shape (GR-FOA-2). Typically, all of these transitions incorporate features to gradually increase the stiffness to reduce the deflection distances between the systems and provide a smooth, strong connection to the rigid object. First, decrease post spacing; second, double nest two W-beam sections at the rigid object; third, provide a strong connection to the rigid object; and fourth, provide a rubrail to prevent wheel snag at the base. In addition to these four items, GR-FOA-1 and GR-FOA-2 standards require that the two posts installed adjacent to the rigid object be larger and longer.

Figure 9: STANDARD GR-FOA-1

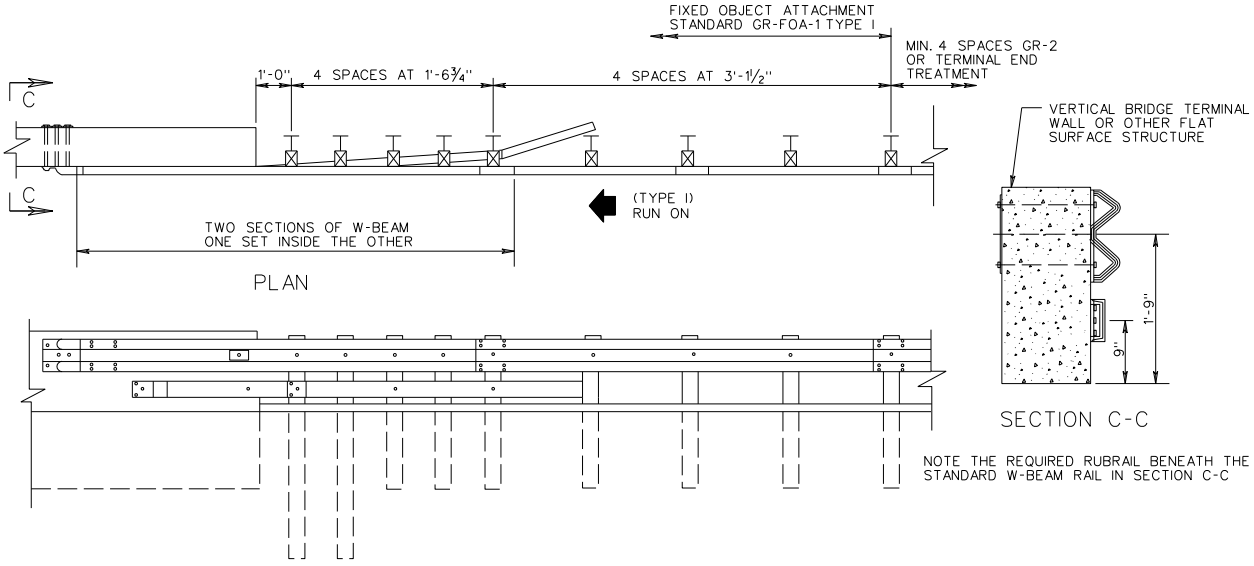

NCHRP 350 GUARDRAIL TRANSITIONS

Figure 10: STANDARD GR-FOA-2

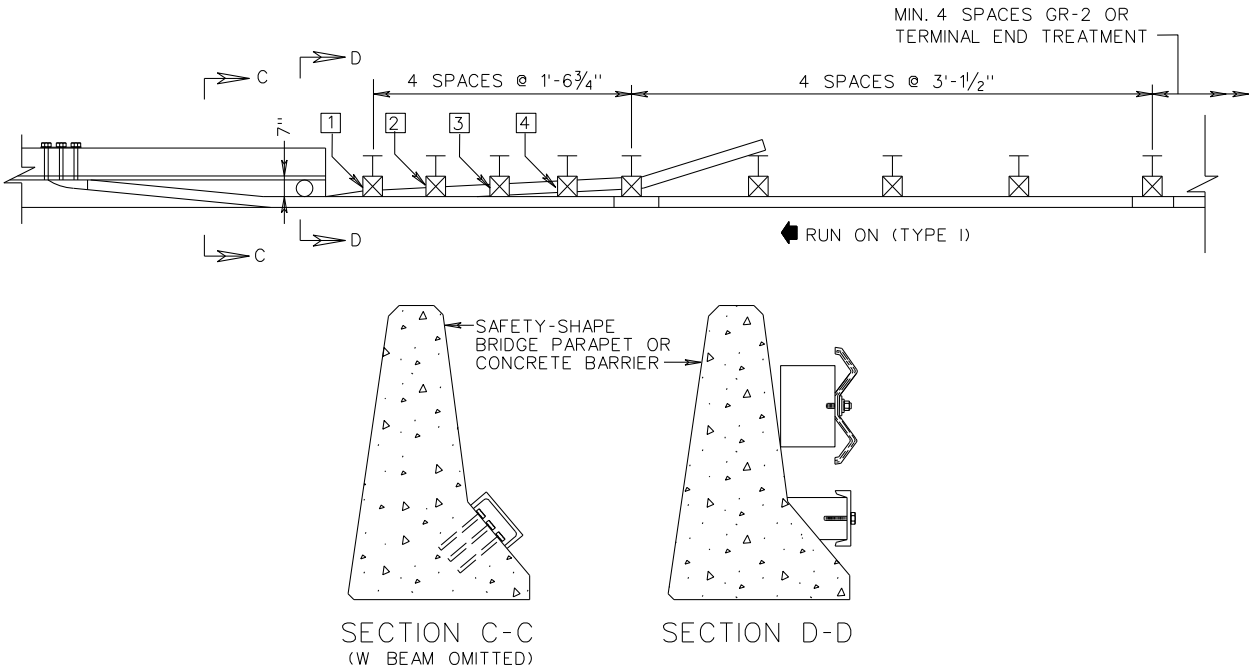

Transitions to the concrete barriers/parapets with vertical or safety shapes are called "direct" transitions and they must have a rubrail to prevent snagging on the base of the concrete barrier or parapet which protrudes towards the roadway.

The strong connection to the rigid object is generally made by using a "Michigan Shoe" terminal connector (Standard GR-HDW, W Beam terminal connector) bolted to the concrete.

Figure 11: STANDARD W-BEAM TERMINAL CONNECTOR (GR-HDW)

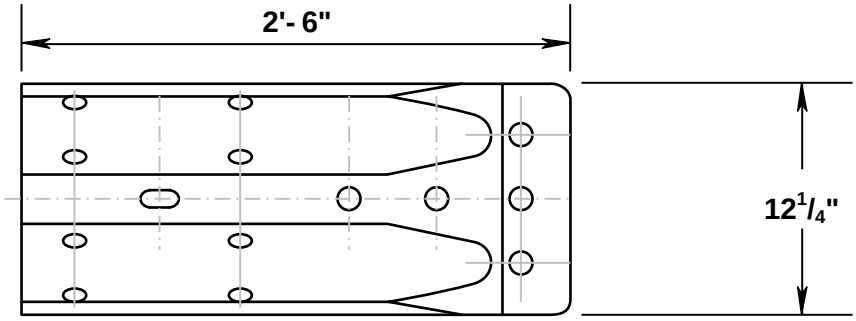

D. GUARDRAIL ATTACHMENT TO TEMPORARY CONCRETE BARRIER IN WORK ZONES (Standard GR-FOA-CZ)

Existing guardrail that is immediately upstream of temporary concrete barrier must be appropriately treated to prevent a vehicle from being directed into the end of the concrete barrier. At a point 50 feet prior to ending the guardrail, extend concrete barrier behind the end of the guardrail posts (flaring the barrier at the taper specified in the Work Area Protection Manual). Connect the standard GR-2 guardrail to the barrier with a standard fixed object attachment. Standard GR-FOA-CZ is the typical design to be used. If there are any other concerns, then other approved FOA's may be used. Rubrails are suggested but not required for fixed object attachments in construction zones. A construction zone is a location that requires good engineering judgment for any safety concerns that may warrant the use of a standard FOA which includes the rubrail, especially if the concrete barrier cannot be extended behind the guardrail post(s).

MASH GUARDRAIL TRANSITIONS

A. VDOT Standard GR-MGS4 - NCHRP 350 STRONG POST TO MASH STRONG POST W-BEAM Transition (GR-2 to GR-MGS1, or to GR-MGS2),

When transitioning from a NCHRP 350 GR-2 system to a MASH GR-MGS1 system, the VDOT Standard GR-MGS4 shall be used. The GR-MGS4 accomplishes 2 things:

- Changes the installation height of the rail
- Moves the splice joint of the rail off the post.

GR-MGS4 shall also be used when replacing GR-9 terminals with GR-MGS2 terminals. This will require additional existing rail to be removed in order to install the GR-MGS4. Currently there are no MASH VDOT approved FOA's. Standard GR-FOA-1, and GR-FOA-2 are still currently approved for use. If they are used in conjunction with the Standard GR-MGS1, or GR-MGS2, then the Standard GR-MGS4 shall be used.

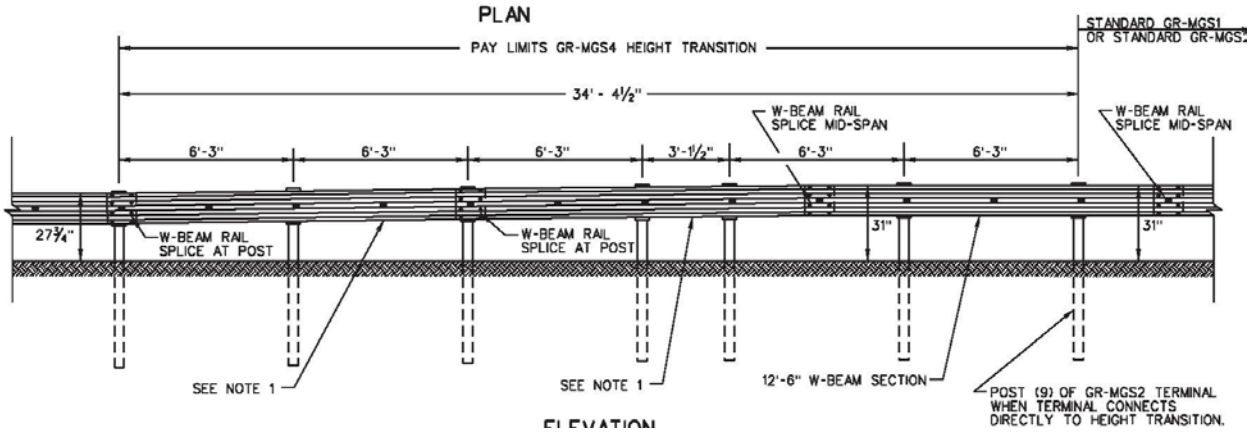

MASH GUARDRAIL TRANSITIONS

B. VDOT Standard GR-FOA5 - MASH STRONG POST W-BEAM TRANSITION TO CONCRETE BRIDGE PARAPET

GR-FOA5 shall be used when connecting the GR-MGS1 system to the VDOT Structure and Bridge Division standard CPSR and SSCP terminal wall. It shall also be used on the vertical face Kansas Corral terminal wall.

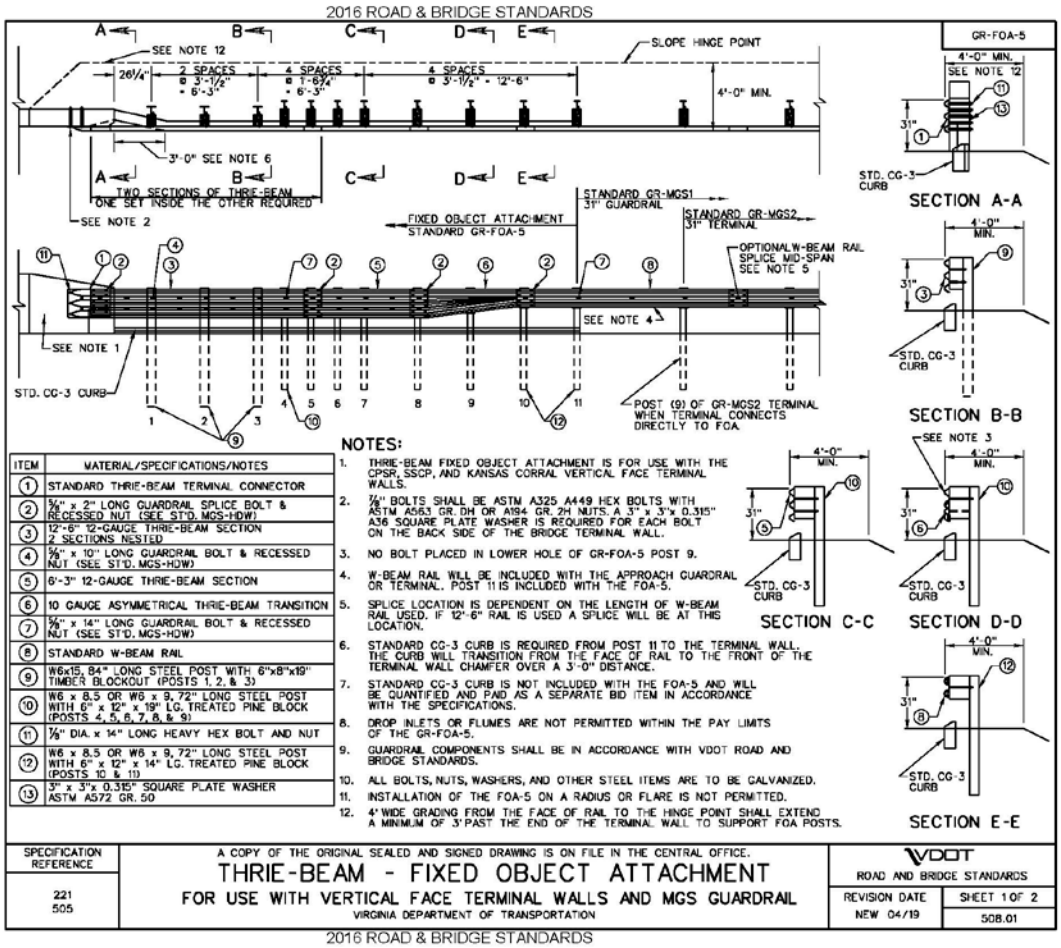

CHAPTER 4



NCHRP 350 and MASH GUARDRAIL TERMINALS

CHAPTER 4
NCHRP 350 GUARDRAIL TERMINALS

A. NCHRP 350 TERMINALS

NCHRP 350 Terminals GR-7, and GR-9 are no longer approved for use or repair.

The use of GR-7 and GR-9 terminals may be evaluated and approved on a case by case basis.
Any use of GR-7 or GR-9 terminals will require a Design Waiver at the District level.
It is strongly suggested that GR-7 and GR-9 terminals be used only as a last resort.
NCHRP 350 Terminal GR-6 is currently approved for use and repair. If GR-6 is used in conjunction with GR-MGS1, a Standard GR-MGS4 is required.

B. NCHRP 350 APPROVED GUARDRAIL TERMINALS

VDOT approved products can be found on VDOT's web site:
http://www.virginiadot.org/business/resources/LocDes/VDOTApprovedProducts.pdf

1. Standard GR-3 - Weak Post Cable System

A cable terminal, similar to those in use today, has been tested and has passed the testing at TL-3. This standard shows the cables tapered down to the ground and anchored in a concrete deadman, preferably in a backslope. The location of the terminal should be determined by the LON procedure previously described. If the anchor is buried in the back slope, the full height of the barrier should be carried 75' upstream of the hazard before crossing the ditchline and tying the cables into the concrete deadman (see discussion in Chapter 3, Section A). The concrete anchor/deadman shall be constructed per the detail in the Standard GR-3.

Constant tension is maintained in the cable system with springs as part of one anchor and turnbuckles to adjust the tension based on the ambient temperature at installation as required in the specifications.

NCHRP 350 GUARDRAIL TERMINALS

2. Standard GR-8, Type II - Weak Post W-beam Terminal System

There is no NCHRP 350 approved terminal for the weak post W-beam system with run-on locations at this time. Run-on conditions must include a strong post terminal and 50 feet of Standard GR-2 and GR-INS transition to the weak post W-beam system. If the run-on locations for one-way traffic on divided roadways the GR-INS transition is not required. When the system is installed under run-off locations for one-way traffic on divided roadways, a turned-down anchorage (GR-8, Type II) which develops the necessary tension, may be used.

3. Strong Post W-beam Terminal Systems

a. Standard GR-6 - Buried in Backslope/ Cut Slope Terminal

The most desirable method to terminate guardrail is to bury the end in a back slope where it cannot be hit end on. This system should be used when the front/fore slope is 4:1 or flatter. It should also be used even when the barrier system LON would normally end downstream of a cut slope if the cut slope is within 200' and there is not a large available runout area (200' x 50') beyond the terminal. The buried terminal must provide the necessary anchorage to develop the required tension forces and must be deep enough so that the end of the rail will not become exposed. Three methods of providing the anchorage are available. The first two has 6' steel posts at 6'-3" spacing with steel plates attached (either bolted or welded), to which the beam is attached with four bolts at each post. The second utilizes a concrete deadman 3' x 2' x 2' to which the rail is attached with a terminal connector to bolt anchors which are either cast in-place or drilled. Each of these anchors must have a minimum of 1' of cover (see standard) which must be compacted on the same plane as the normal ground slope with no mounds or “bubbles” being made. The third method is to anchor the w-beam rails to a rock cut slope with a 1:1 or steeper slope.

If there is a ditch at the bottom of the 10:1 slope, the height of the rail should be measured from the 10:1 slope extended. A bottom rail should be added when the height between the groundline and the bottom of the rail exceeds 18". The top of the top rail is held level relative to the edge of shoulder typically until it reaches the ditch bottom, then is buried and anchored. The bottom rail begins at the first post downstream of where the height between the bottom of the top rail and the ground exceeds 18". It is bolted on the back of the post. It is then carried across the ditch bottom, buried, and anchored to a plate on the last post before the end anchor. When a bottom rail is used, the posts must be 8' long. No more than 18" can be exposed under the bottom rail. No more than this maximum is allowable even if it means lowering the top rail elevation relative to the shoulder edge.

NCHRP 350 GUARDRAIL TERMINALS

Regardless of whether one or two rails are used, the rail must not cross the ditch bottom until it has extended a minimum of 75' upstream from the beginning of the hazard being shielded, typically the cut to fill slope transition. Two situations where the length of the rail may be shortened are: where the backslope to which the rail is to be anchored is 1:1 or steeper which would preclude a vehicle from climbing over the rail; and if the result of a vehicle climbing over the rail where it is buried would not present a significant danger. After it crosses the ditch bottom, it should end 50' upstream, offset a maximum of 8' (based on a 4:1 cut slope) back from the ditch bottom. This last 50' may be tapered down to provide the required minimum cover, and the offset may be reduced when a steep backslope would cause the cover to be greater than 1'.

Typically these devices are installed in soil. For installation in rock, refer to FHWA Memorandum HAS-10/B64-B, "W-Beam Guardrail Installations in Rock and in Mowing Strips".

b. Standard GR-7 - NCHRP 350 Flared Terminals

A flared terminal configuration is one which flares the end of the terminal from the normal line of the barrier. Currently, only a 4' flare is accepted. The flared system is designed to allow a vehicle impacting on or near the end to pass on through the end of the terminal with minimal reduction of speed or energy.

Breakaway Cable Terminals (BCTs) and Modified Eccentric Loader Terminals (MELTs) are types of generic flared terminals that were previously used; however, they are no longer acceptable as TL-3 systems under NCHRP 350 requirements.

Types of approved flared terminals include the following:

1. Slotted Rail Terminal (SRT-350)
2. Flared Energy Absorbing Terminal (FLEAT-350)
3. X-Tension (Flared)

All terminal systems are proprietary or patented and the manufacturer's installation instructions must be precisely followed. Each utilizes a breakaway cable anchorage system, to develop the terminal tension (see FHWA, VDOT, and the manufacturer's web sites for approved products).

NCHRP 350 GUARDRAIL TERMINALS

As noted previously, a vehicle hitting the end of these terminals, either head-on or at an angle, will break away the end and pass through with little absorption of energy. It is, therefore, imperative that a large runout area free of hazards be available downstream of the beginning of the terminal. This area would desirably be as long as 250' and as wide as 40', but at least the width of the design clear zone area. This amount of area will generally be provided if a LON determination has been performed. If an adequate clear area is not available, one of the GR-9 parallel terminals described below may be more appropriate since for small angle hits they have the capability to capture the vehicle and bring it to a stop within the terminal length. In all cases, there should be no obstacle in the 75' from the beginning of the terminal unless it is connected to a concrete barrier or bridge parapet.

c. Standard GR-9 - NCHRP 350 Parallel Terminals

Parallel terminals are straight systems that may be placed parallel with the roadway. These systems are designed to absorb energy upon impact, and reduce the chances of injury. For higher angle end impacts, the vehicle will pass through with little absorption of energy and reduction in speed. Some of the parallel systems utilize a large impact head at the beginning of the terminal which protrudes in front of the barrier. Offset the impact head 1' using a straight line flare for 50'.

Types of NCHRP 350 approved parallel terminals include the following**:**

1. ET-2000
2. ET-Plus (5” Channel)
3. Sequentially Kinking Terminal (SKT-350, SKT-SP)
4. X-Tension
5. Crash-cushion Attenuating Terminal (CAT-350) Median
6. X-Tension Median
7. FLEAT- MT Median
8. Brakemaster 350 Median

All of these terminal systems are proprietary or patented and the manufacturer’s installation instructions must be followed (see FHWA, VDOT and Manufacturer’s web site for approved products).

Since the last four terminals listed have additional capabilities, they can be used as median or two sided end terminals and in gores. They are usually more costly, therefore, they are not competitive with terminals 1 thru 4, for one side rail barriers, even though they are totally acceptable.

NCHRP 350 GUARDRAIL TERMINALS

4. VDOT Standard GR-9 - NCHRP 350 W-beam Median Barrier Terminals

When a W-beam median barrier is likely to be hit from either side, only the 4 systems as described below may be used for a W-beam median barrier system. If the barrier is unlikely to be hit on the back side due to being at least 40' away from traffic, single face barrier terminals may be used if called for on the plans. When a terminal is subject to being hit often, or is very close to traffic, a higher type, more sophisticated terminal/crash cushion is generally preferred. This course does not address crash cushions. When a crash cushion is used to terminate a W-beam barrier, the barrier system still must have its tension requirement provided.

Types of NCHRP 350 approved W-beam median barrier terminals include the following**:**

1. Crash-cushion Attenuating Terminal (CAT-350)
2. X-Tension Median
3. FLEAT- MT
4. Brakemaster 350

5. NCHRP 350 Terminals in curbed sections

There are currently no terminals approved for use in conjunction with curbs. The best advice is:

(1) Widen the outside travel lane by 4’ and install the terminal in front of the curb per detail in the VDOT RDM, Appendix I

(2) Drop the curb to 2" height for approximately 50' in advance of the end of the terminal so the vehicle is at the appropriate height when contact is made. For a parallel terminal, the 2" height should be carried an additional 12' beyond the upstream end of the terminal, and the end of the terminal should be offset 1' to keep the impact head behind the face of curb. For a flared terminals, the 2" height should be carried 37' beyond the upstream end of the terminal. A request for a detail of this design may be submitted to Location & Design Division’s Standards/Special Design section.

(3) Taper the rail back from the face of curb on a 25:1 taper for 50', raising the height an amount equal to the height of curb, and use a crashworthy terminal based on this line of the 25:1 extended/ A request for a detail of this design may be submitted to Location & Design Division’s Standards/Special Design section.

NCHRP 350 GUARDRAIL TERMINALS

6. VDOT Standard GR-11 - NCHRP 350 Trailing End Terminals

The trailing end or downstream end of a barrier system that is not likely to be hit by opposing traffic only needs to develop the necessary tension for the barrier system. This can be done in several ways.

The best way is to use the trailing end anchorage, Standard GR-11, which uses the principle of an anchorage cable which is restrained by the steel bearing plate against a wooden post in a steel foundation tube, similar to approach end terminals. The second post and strut are unnecessary in this installation. The soil plate is placed on the upstream side of the tube. This last post is generally located approximately two post spaces beyond the end of the hazard. Due to the large dynamic deflection of the weak post GR-8 system, this terminal should only be used with a length of GR-2 and a transition from GR-8 to the GR-2 as described in Chapter 3 and the VDOT Standard GR-INS detail.

Turned-down terminals that develop the necessary tension may also be used. The full capability of the barrier system must be available at the end of the hazard. This system may be desirable for use to terminate a barrier that is considerably outside the clear zone for the opposing traffic where there is still some likelihood of an opposing traffic hit. The weak post turned-down terminal (Std. GR-8, Type II), with full anchorage, is acceptable for the trailing end of the weak post GR-8 system.

7. NCHRP 350 Bullnose Terminal

The current design for the Bullnose Terminal is a Special Design insertable sheet available upon request from the Location & Design Division's Standards/Special Design section. This Thrie Beam Terminal design is NCHRP 350 approved, but it is recommend that all other options be explored before its use.

C. SITE GRADING FOR NCHRP 350 TERMINALS

With the exception of the buried in backslope terminal (GR-6) which was tested on a 4:1 max. frontslope, crash testing is generally done on flat terrain. It is, therefore, desirable to reproduce this feature as close as practical for field installations. For NCHRP 350 terminal installations that occur at the top of frontslopes, the following principles should be followed.

SITE GRADING NCHRP 350 **Cont'd**

1. **Grading in front of the terminal** - The ground between the roadway and the terminal must be graded to a 10:1 or flatter cross-slope for the length of the terminal. There are no exceptions.

2. **Grading in advance of the terminal** - A grading platform should be developed upstream of the end of the terminal so the approaching vehicle will be stable when it strikes the end of the terminal. A triangular wedge of embankment must be provided from the edge of the normal shoulder grading back to the end of the grading at the end of the terminal on a 10:1 cross-slope. The taper on this wedge for new construction and reconstruction should be 15:1. For 3R work or Limited use the taper should be at least 10:1 (see Figure 13 & 14). The slope beyond the 10:1 platform should be gentle so as not to introduce a discontinuity in the parallel side slope.

3. **Grading behind the end post** - The 10:1 grading in front of a terminal should extend behind the terminal so that a vehicle impacting the end of the terminal head-on will be relatively level. For new and reconstruction, the platform should extend a minimum of 5'-0" behind the face of rail. For 3R work or Limited use the grading should be as close as possible to new construction but must extend a minimum of 2'-6" behind the blocked out terminal posts for the length of the terminal from a point 10'-0" prior to the impact head (see Figure 13 & 14).

4. **Grading behind the terminal downstream of the end post** - The grading should be safely traversable for a vehicle passing through the end post. Because the vehicle may be somewhat unstable after impacting the terminal end, this area should be as flat as possible and extend some distance downstream. Desirably, the slope should be no steeper than 4:1 except in restricted 3R work or Limited use.

5. **Payment for grading** - For new construction and reconstruction, grading to provide the required site preparation should be incidental to general earthwork. In some cases, a separate pay item will be needed for placement, compaction and seeding of borrow material. The material must be adequately stabilized to prevent erosion.

Figure 13: SUGGESTED ROADSIDE SLOPES FOR APPROACH BARRIERS

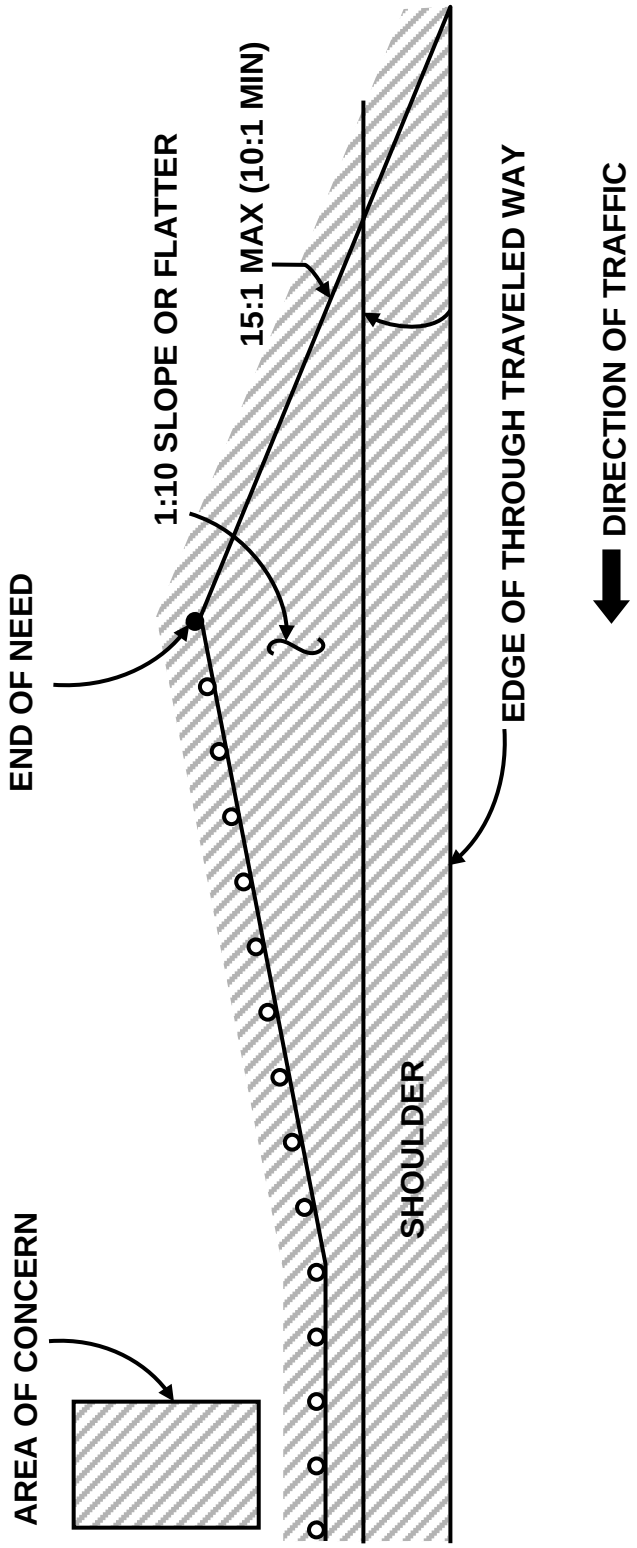

D. BREAKAWAY CABLE ANCHORAGE INFORMATION

Terminals with exposed ends have many common features necessary to assure proper field performance. The tests on these systems were conducted on level ground and under precise installation conditions. All systems utilize an anchored cable to develop required tension for downstream hits. For end-on hits, the vertical end of the terminal is broken away, allowing the vehicle to continue downstream.

The exposed end is typically a hinged post. This is called a "breakaway cable anchorage". The cable is restrained with a bearing plate on the upstream side of the post, and is attached to the rail element with a cable anchor bracket just in advance of the second post. The bearing plate must be restrained from rotating by using a restraining device. Some systems provide for a nail through the bearing plate to prevent rotation while other may provide a steel "tie strap".

The anchorage cable should be taut which means that the cable can not easily be lifted more than 1". When tightening the nut to make the cable is taut, the cable must be restrained from twisting. This can be accomplished by clamping the cable with pliers or vice grips while the nut is being turned.

In order to spread the tension developed in the cable anchor to more than the first post, a steel strut and yoke is used to connect the first two posts. The strut can be used as an indication of proper installation with respect to site grading. There shall not be more than 2" between the ground and the bottom of the strut and preferably, it should be flush with the ground.

Most of the proprietary systems were tested with either steel yielding or hinged breakaway posts. Therefore, follow the manufacturer's installation instructions for the particular unit to be installed.

Normally, installation of the posts or steel foundation tubes is into soil. If rock is encountered, refer to the installation instructions or contact the manufacturer for instructions on an allowable method for installing the device in rock.

E. MASH APPROVED GUARDRAIL TERMINALS

VDOT Standard GR-MGS2

1. The VDOT Standard GR-MGS2 shall be used for all new construction as well as replacement of damaged GR-7 and GR-9 terminals.

2. The site grading requirements for Standard GR-MGS2 are similar to those as described in section C of this chapter, however the minimum width is 6' from face of rail (4' for limited use see Figure 14). It is imperative that the site grading be constructed per the GR-MGS2 Standard drawing to replicate the test condition as much as practical.

3. The GR-MGS2 terminal is a parallel terminal and thus it shall be installed with no flare and in a straight tangent. Bending the terminal in a radius will NOT be allowed.

4. Modifying posts or any other component is not allowed. Damaged posts and or components shall not be accepted under any circumstances.

5. VDOT approved MASH products can be found on VDOT's web site: http://www.virginiadot.org/business/resources/LocDes/VDOT_MASH_Approved_Products.pdf

VDOT Standard GR-MGS3

1. The trailing end or downstream end of a barrier system that is not likely to be hit by opposing traffic only needs to develop the necessary tension for the barrier system.

2. For the GR-MGS1 system, the Standard GR-MGS3 shall be used. The GR-MGS3 utilizes an anchorage cable which is restrained by a steel bearing plate against a wooden post in a steel foundation tube. The soil plate is placed on the upstream side of the tube. This last post is generally located approximately two post spaces beyond the end of the hazard. The second post is also a wooden post and foundation tube that utilizes a strut between post 1 and 2

3. The use of VDOT Standard GR-MGS3 is restricted to Runoff conditions on Divided Highways ONLY !

Figure 14: GR-MGS2 LIMITED USE SITE PREPARATION

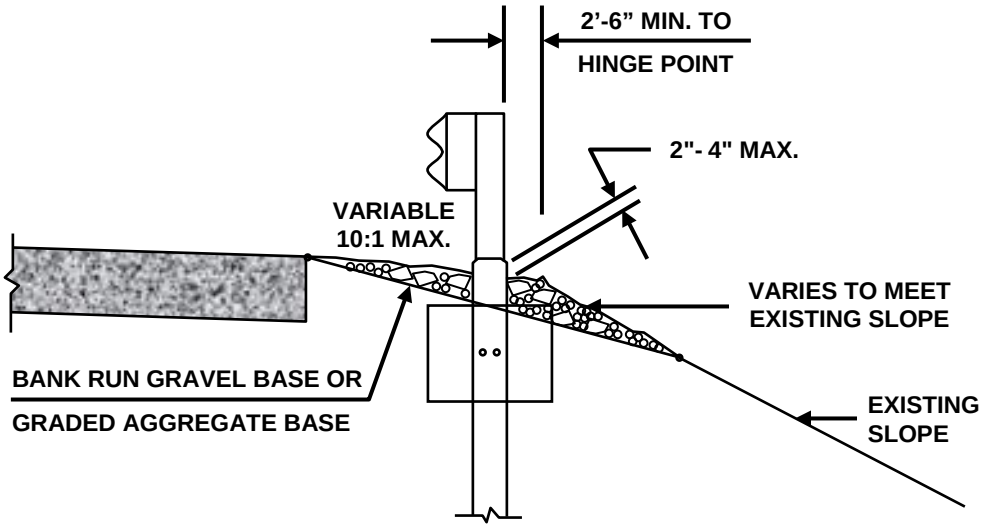

ELEVATION VIEW

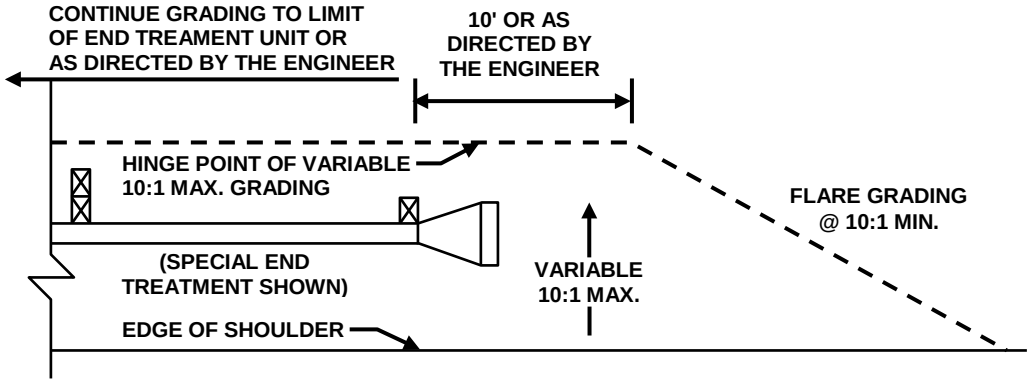

DIRECTION OF TRAFFIC

PLAN VIEW

CHAPTER 5



SPECIAL GUARDRAIL TREATMENTS

CHAPTER 5
SPECIAL GUARDRIAL TREATMENTS

A. GUARDRAIL AT LOW FILL CULVERTS (Standard GR-10)

When it is not possible to drive a full length post due to some obstruction such as a drop inlet, shallow culvert or electrical pull box, it is permissible to leave out one, two or three posts and modify the rail element by adding a second rail section nested inside the normal rail. The nested beams must be installed as per Standard GR-10. The use of GR-10 Type I and Type II are allowed in conjunction with the MGS1 system. A note should be added to the plan directing the Contractor to install the GR-10 at 31". GR-10 Type III will require the use of the MGS4 transition on either side.

B. EXTRA BLOCKOUTS (Standard GR-INS)

When a post cannot be driven in its normal location, additional blockouts may be added to provide more offset. This will allow the post to be placed further back, eliminating the conflict. For one post only a blockout greater than 16" up to 24" may be used every 100'. Blockouts up to 16" may be used continuously.

C. RADIAL GUARDRAIL USED AS A TERMINAL

The frequent presence of driveways, turnouts, or side roads often creates a challenge to properly terminate the guardrail. In the past, the most common treatment for this situation was to use shop-bent radial W-beam panels around the radius, with either standard post spacing or half post spacing to create additional stiffness. Specific crash data indicates that this treatment does not prevent spearing and is unlikely to provide any redirection. It may also cause vaulting or excessive decelerations. **The required method is the use of a Standard GR-MGS2 Terminal. Never use the radial end treatment method to terminate guardrail.**

D. HIGH-TENSION CABLE SYSTEMS

VDOT has installed approximately 50 miles of high-tension cable barrier on roadways in the Commonwealth. All high-tension cable guardrail systems are proprietary. All high-tension cable guardrail systems must meet the MASH TL-3 or TL-4 crash test standards. The installed system must meet the VDOT's specifications for the project's application. Please contact Location & Design Division's Standards/Special Design section for assistance on the use of HTC Barrier.

Figure 15: NESTING OF W-BEAM RAIL FOR LEFT OUT POST

See Standard GR-10 for Type I, II, and III (Type I illustrated below)

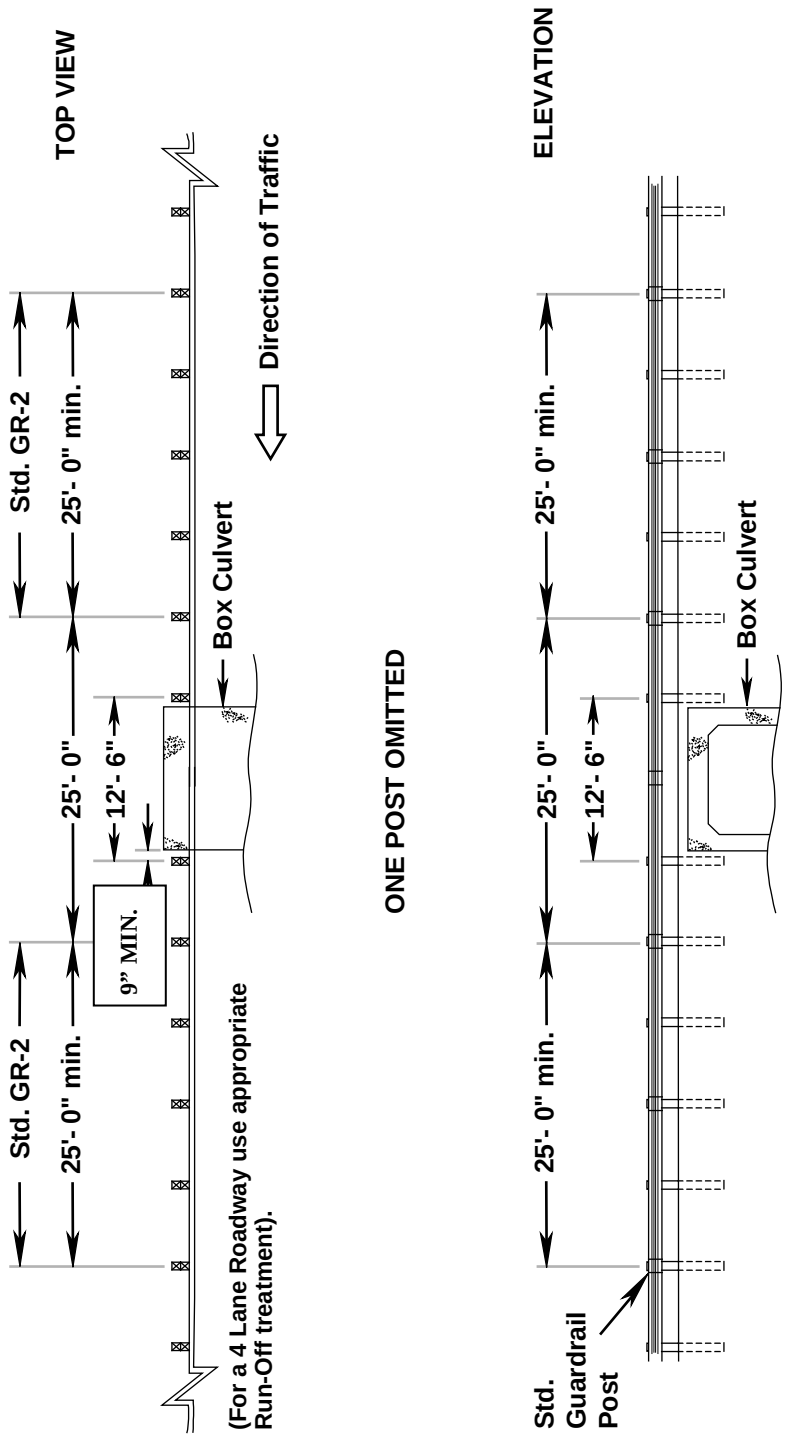

CHAPTER 6



DELINEATION

CHAPTER 6
BARRIER DELINEATION

Note: Delineation shall be installed on all new, repaired and relocated guardrail and terminals.

A. GUARDRAIL INSTALLATIONS

1. Delineators shall be made of plastic and be flexible in order to recover from impact. They shall have a minimum reflective area of 7 sq in, project no more than 5" above the post or blockout, and utilize prismatic lens sheeting.

2. The delineator should be mounted on the web on top of guardrail blockout and if no blockout is used, on the web on top of the post. If wood blockouts are used, they should be installed on top of the blockout using adhesive, or either stainless or galvanized screws.

3. Install delineators at the spacing specified, typically, a maximum of 80' on centers. On curves the spacing should be reduced to comply with the spacings specified for interstate road edge delineators. When installed as part of a guardrail repair, at least one delineator should be placed upstream and one downstream of the repair.

4. The color of the delineator should match that of the roadway edgelines.

B. TERMINALS

1. All GR-MGS2 terminals shall have a yellow reflective sheeting with black diagonal stripes and shall be installed covering the full area inside the end of the impact head. The black diagonal stripes point down towards the roadway.

CHAPTER 7

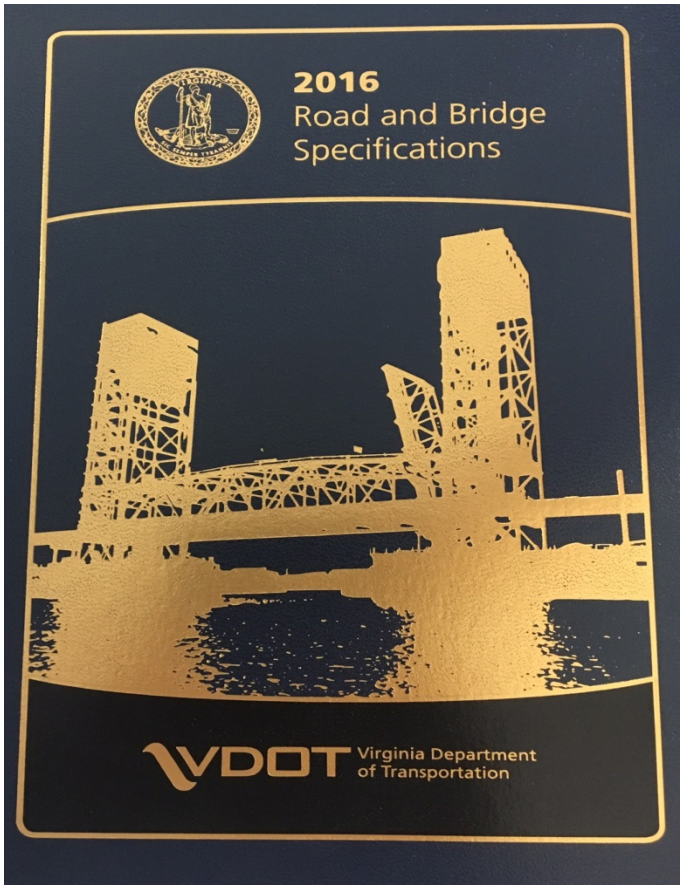

GUARDRAIL INSTALLATION REFERENCES

CHAPTER 7
GUARDRAIL INSTALLATION REFERENCES

In addition to the guardrail installation information in the 2016 VDOT Road and Bridge Standards covered in this manual, there are several other documents that govern the application and installation of guardrail devices. Designers, Inspectors and Installers should refer to these documents to ensure the appropriate guardrail installation specifications and guidance is followed. For all proprietary and/or patented guardrail systems and devices, the manufacturer's installation instructions shall be followed. All guardrail systems and devices shall be installed as tested per the MASH criteria.

For installation procedures and inspection on installation, Section 505 of the 2016 VDOT Road and Bridge Specifications should be utilized with the VDOT Standard and Special Design guardrail systems. Specific information on setting the tension on GR-3 cables and the reuse of guardrail systems as well as other requirements are covered in Section 505 of the 2016 VDOT Road and Bridge Specifications. In addition to the applicable standards and specifications, project specific special provisions such as requirements for high-tension cable systems, may also be utilized.

The department has published memorandums providing guidance on the application, current condition, and repair and upgrading of guardrail systems. Designers and engineers should refer to VDOT Road Design Manual and the 2016 VDOT Road and Bridge Standards for guidance on the application of various guardrail standards and guardrail systems. Traffic Engineering (TE) Memorandum TE-366 and related form should be utilized to rate the condition of existing guardrail systems and devices for the completion of an engineering study. TE Memorandum TE-367 and related form should be utilized for evaluating damage to existing guardrail systems and safety upgrades for existing guardrail systems in the completion of an engineering study.

Any questions or concerns about the Design, Construction and Repair of guardrail systems can be directed to The Virginia Department of Transportation, Construction Standards and Special Design Section:

Charles Patterson 804-786-1805
Wm. Matt Barret 804-371-2788
Bryant Lowery 804-786-9468
Matthew Cross 804-786-2577

APPENDIX

Acronyms and Glossary

List Of Acronyms

3R	Restoration, Rehabilitation and Resurfacing
AASHTO	American Association of State Highway and Transportation Officials
ADT	Average Daily Traffic
BCT	Breakaway Cable Terminal
CAT	Crash-cushion Attenuating Terminal
CRT	Controlled Releasing Terminal
CZ	Clear Zone
FHWA	Federal Highway Administration
FOA	Fixed Object Attachment
LON	Length of Need
LR	Runout Length
MASH	Manual for Accessing Safety Hardware
NCHRP	National Cooperative Highway Research Program
NHS	National Highway System
RwD	Roadway Departure
SKT	Sequentially Kinking Terminal
SRT	Slotted Rail Terminal
TL	Test Level

Glossary

Average Daily Traffic (ADT): The average 24-hour volume of traffic calculated as the total volume during a stated period divided by the number of days in that period.

Attenuator: A device that lessens, weakens, or reduces the severity of an impact.

Back Plate: A steel plate used under the nuts of bolts through a concrete parapet or wall to keep the bolts from pulling out. (Standardized hardware nomenclature FPB02)

Backslope: "Cut slope" The cross-section slope beyond the ditchline.

Back-up Plate: A 1' section of W-beam rail used with weak post w-beam guardrail barrier systems (NCHRP 350) to prevent the guardrail from shearing on the steel post. (Standardized hardware nomenclature RWB01a-b)

Barricade: A device which provides a visual indicator of a hazardous location or the desired path a motorist should take. Its function is not to contain or redirect an errant vehicle.

Barrier: A device which provides a physical limitation through which a vehicle would not normally pass. It is intended to contain or redirect an errant vehicle.

- Rigid Barrier - A longitudinal barrier which does not deflect upon impact and dissipates a negligible amount of the vehicle's impact energy.

- Semi-Rigid Barrier - A longitudinal barrier ranging from practically rigid to quite flexible, which will dissipate some of the impact energy through yielding of the rail and post elements and in some cases, the soil.

- Flexible Barrier - A longitudinal barrier that deflects a considerable distance, dissipating much of the energy, and smoothly redirects a vehicle through the tension in the longitudinal element.

Bearing Plate: A plate used on the first post of a breakaway cable anchorage through which the cable passes to provide bearing. (Standardized hardware nomenclature FPB01)

Breakaway: A design feature which allows a device such as a sign, luminaire, or traffic signal support to yield or separate upon impact. The release mechanism may be slip plane, plastic hinges, fracture elements, or a combination of these.

Breakaway Cable Anchorage: A device designed to develop the tension in a W-beam barrier system using a cable attached to the W-beam rail and passing through a hole in a wood post near ground level and anchored with a bearing plate on the upstream side of the wood post. For downstream impacts on the barrier system, the wood post transfers the tension from the cable to

the ground resistance; for end on impacts, the wood post breaks away releasing the cable, allowing the vehicle to continue moving without significant decelerations. Soil resistance is developed by steel foundation tube(s) into which the wood post is inserted.

Bridge Pier: Intermediate support structure for a bridge.

Bridge Railing: A longitudinal barrier whose primary function is to prevent an errant vehicle from going over the side of the bridge structure.

Buffered End Section: The curved end section used on the beginning end of breakaway cable terminal. (Standardized hardware nomenclature RWE04a)

Cable Anchor Bracket: A steel bracket or assembly used to attach a breakaway cable to a W-beam rail. (Standardized hardware nomenclature FPA01)

Clear Run-out Area: The area at the toe of a non-recoverable slope available for safe use by an errant vehicle.

Clear Zone (CZ): The total roadside border area, starting at the edge of the traveled way, available for safe use by errant vehicles. This area may consist of a shoulder, a recoverable slope, a non-recoverable slope and/or a clear run-out area. The "minimum design" width is dependent upon the traffic volumes and speeds, and on the roadside geometry. The desired width is the maximum, cost-effective attainable.

Controlled Release Terminal (CRT) Post: A drilled wood guardrail post used in breakaway terminals. (Standardized hardware nomenclature PDE09)

Cost-Effective: An item or action taken which is economical in terms of tangible benefits produced by money spent.

Crash Cushion: An impact attenuator device that prevents an errant vehicle from impacting fixed object hazards by gradually decelerating the vehicle to a safe stop or by redirecting the vehicle away from the hazard.

- Non-redirective Crash Cushion - An impact attenuator that does not control an angle impact on its side and allows pocketing or penetration of the system. The vehicle can reach the hazard.

- Redirective Crash Cushion - An impact attenuator that smoothly controls an angle impact on its side without pocketing or penetrating the system. The vehicle does not reach the hazard.

Crash Tests: Vehicular impact tests by which the structural and safety performance of roadside barriers and other highway appurtenances may be determined. Three evaluation criteria are considered, namely (1) structural adequacy, (2) impact severity, and (3) vehicular post-impact trajectory.

Crash Worthy: A device that has met the evaluation criteria when subjected to the applicable crash tests.

Critical Impact Angle (CIA): For a given test and the attendant range of vehicular impact angles, the CIA is the angle within this range judged to have the greatest potential for causing a failure when the test is assessed by the recommended evaluation criteria. For most tests, impact angles can range from 0 up to 25 degrees.

Critical Impact Point (CIP): For a given test, the CIP is the initial point(s) of vehicular contact along the longitudinal dimension of a feature judged to have the greatest potential for causing a failure when the test is assessed by the recommended evaluation criteria.

Design Speed: The speed selected and used for correlation of the physical features of a highway that influence vehicle operation.

Double Nesting: The doubling of W-beam guardrail to reduce deflection.

Downstream: The leave side of a feature or trailing end relative to traffic. This term is synonymous with "run-off."

Dynamic Deflection Distance: This is the distance a guardrail system deflects when impacted. measured from the face of the guardrail.

Fixed Object Attachment: The design used to strengthen and attach a run of strong post guardrail to a rigid barrier system.

Flare: the variable offset distance of a barrier to move it farther from the traveled way.

Flared Terminal: A guardrail terminal that is flared away from the roadway.

Flare Rate: The ratio expressing the flare as the relation of the longitudinal length to the offset distance.

Foundation Tube: A metal tube installed in the soil for the installation of a breakaway wood post used in guardrail terminals. (Standardized hardware nomenclature PTE05)

Frangible: A structure readily or easily broken upon impact.

Frontslope: "Fill Slope" The slope between the shoulder break and the ditchline.

Gating Device (Feature): A device designed to allow penetration of a vehicle when impacted upstream of the beginning of its redirection capability point. Note: there is some distance between the end of a gating device and the beginning of its redirecting capability.

Ground Strut and Yoke Assembly: A metal channel section installed flush with ground at the beginning of breakaway terminals between the first two posts. (Standardized hardware nomenclature PFP01)

High Speed Roadway: Roadway with a design speed of over 45 mph.

Hinge Point: The point at which a shoulder slope and fill meet.
The outer limit of the roadway shoulder.

Impact Angle: For a longitudinal barrier, it is the angle between a tangent to the face of the barrier and a tangent to the vehicle's path at impact. For a crash cushion/terminal, it is the angle between the axis of symmetry of the crash cushion/terminal and a tangent to the vehicle's path at impact.

Impact Attenuator: See Crash Cushion.

Impact Head: The metal unit that is attached to the end of guardrail terminals which moves down the guardrail when hit dissipating energy though various methods.

Lapping: The placement of one section of w-beam over the next downstream section (in the direction of traffic) so that the connection will not snag a vehicle.

Lateral Offset: Distance between the traveled way and a roadside barrier.

Length of Need (LON): That length of longitudinal barrier required upstream of an area of concern necessary to appropriately shield the area, containing and redirecting an impacting vehicle.

Runout Length (LR): The distance from the object being shielded to the location where the vehicle departs the roadway.

Longitudinal Barrier: A device whose primary functions are to prevent vehicular penetration and to safely redirect an errant vehicle away from a roadside or median hazard. The three types of longitudinal barriers are roadside barriers, median barriers, and bridge rails.

Low Speed Roadway: Roadway with a design speed of 45 mph or less.

Median: The portion of a divided highway separating the traveled ways for traffic in opposite directions, measured from edge of traveled way to edge of traveled way.

Median Barrier: A longitudinal barrier used to prevent an errant vehicle from crossing the highway median.

National Highway System (NHS): All Interstate highways and other major arterial highways nominated by the states and designated under the National Highway System Act of 1995.

Non-gating Device: A device with redirectional capabilities along its entire length. Note that the end of a non-gating device is essentially the beginning of its redirecting capability.

Non-Recoverable Slope: A slope which is considered traversable but on which the errant vehicle will continue on to the bottom. Embankment slopes steeper than 4:1 but no steeper than 3:1 may be considered traversable but non-recoverable if they are smooth and free of fixed object hazards.

Parallel Terminal: A guardrail terminal that basically is parallel to the roadway

Pocketing: Action of a vehicle creating excessive deflection of a barrier which can result in an abrupt redirection.

Recoverable Slope: A slope on which a motorist may retain or regain control of a vehicle. Slopes equal to or flatter than 4:1 are generally considered recoverable.

Roadside Barrier: A longitudinal barrier used to shield roadside obstacles or non-traversable terrain features.

Run-off End: The downstream end or trailing end of a guardrail system.

Roadway Departure Crash: An accident that occurs as a result of a vehicle leaving the roadway.

Run-on End: The upstream end or beginning end of a guardrail system.

Shielding: The introduction of a barrier or crash cushion, between the vehicle and an obstacle or area of concern to reduce the severity of impacts of errant vehicles.

Shy Line Distance: The distance from the edge of the traveled way beyond which a roadside object will not be perceived as a hazard, potentially causing the driver to change his vehicle's placement or speed.

Slip Base: A structural element at or near the bottom of a post or pole which will allow release of the post from its base upon impact while resisting wind loads.

Slope: The relative steepness of the terrain expressed as a ratio or percentage. Slopes may be categorized as positive (backslopes) or negative (foreslopes), and as parallel or cross slopes in relation to the direction of traffic.

Snagging: When a portion of a test vehicle, such as a wheel, engages a vertical element in a redirective device, such as a post, snagging is said to have occurred. The degree of snagging depends on the degree of engagement. Snagging may cause large and unacceptable vehicular decelerations as well as tendency to overturn the vehicle.

Soil Plate: A rectangular steel plate attached to a guardrail post or soil tube to resist horizontal movement in the ground. (Standardized hardware nomenclature PLS03)

Taut: This term is used when referring to a cable anchor. A taut anchor cable should not move more than 1" when lifted upward by hand from its free hanging position.

Terminal: A device designed to treat the end of a longitudinal barrier. An upstream terminal may function by (a) decelerating a vehicle to a safe stop within a relatively short distance; (b) permitting controlled penetration of the vehicle behind the device; (c) containing and redirecting the vehicle; or (d) a combination of a., b., and c. A downstream terminal develops the tension required for the barrier system to perform properly.

Test Level (TL): A set of conditions, defined in terms of vehicular type and mass, vehicular impact speed, and vehicular impact angle, that quantifies the impact severity of a matrix of tests.

Trailing End Anchorage: An W-beam anchorage system used on the downstream end of guardrail run to provide anchorage and tension in the rail.

Transition: A section of barrier between two different barriers or, more commonly, where a roadside barrier is connected to a bridge railing or to a rigid object such as a bridge pier; the upstream barrier system is less stiff than the downstream system. The transition should produce a gradual stiffening of the approach rail so vehicular pocketing, snagging, or penetration at the connection can be avoided.

Traveled Way: The portion of the roadway for the movement of vehicles, exclusive of shoulders, turning lanes, and auxiliary lanes. Also referred to as the “Thru lane”

Traversable Slope: A slope on which a vehicle will likely be steered back to the roadway, be able to retained control of, or continue safely to the bottom.

Upstream: The approach side of a feature relative to traffic. This term is synonymous with “run-on.”

Warrants: The criteria by which the need for a safety treatment or improvement can be determined.